RAVEN

Simply improving your position.℠

Installation & Service Manual

SCS 700

W A R N I N G

Disconnect console before jump starting, charging battery, or welding on equipment.

THIS CARD IS PROVIDED FOR OPERATOR'S CONVENIENCE. PENCIL IN THE CALIBRATION NUMBERS FOR FUTURE REFERENCE. CUT ON DOTTED LINE, FOLD, AND INSERT INTO PLASTIC ENVELOPE.

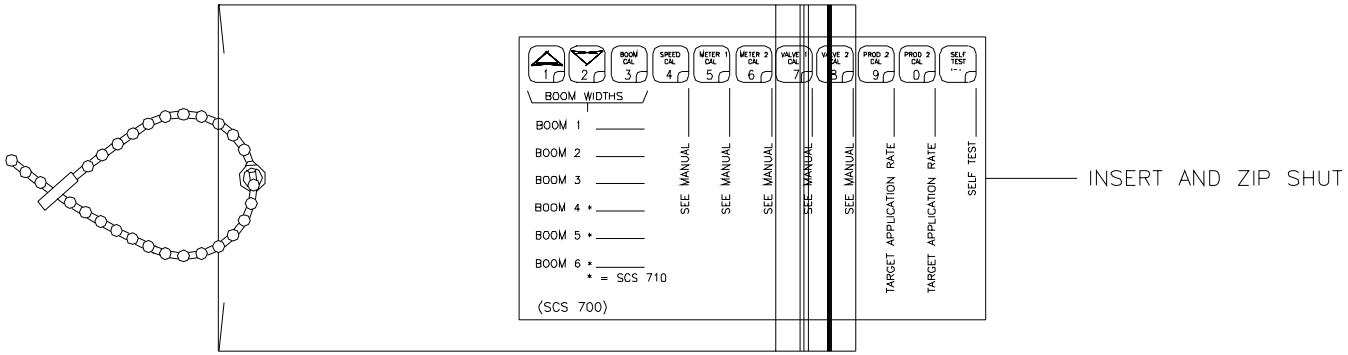

FOLD LINE

CUT ON DOTTED LINE

WARNING: DISCONNECT CONSOLE BEFORE JUMP STARTING, CHARGING BATTERY, OR WELDING ON EQUIPMENT.

DATA ENTRY EXAMPLE: TO ENTER VALVE CAL.

1. PRESS VALVE CAL KEY.
2. PRESS ENTER KEY.
3. PRESS KEYS REQUIRED, TO ENTER PROPER NUMBER.

(EXAMPLE: KEYS 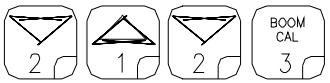 FOR 2123)

4. PRESS ENTER KEY AGAIN.

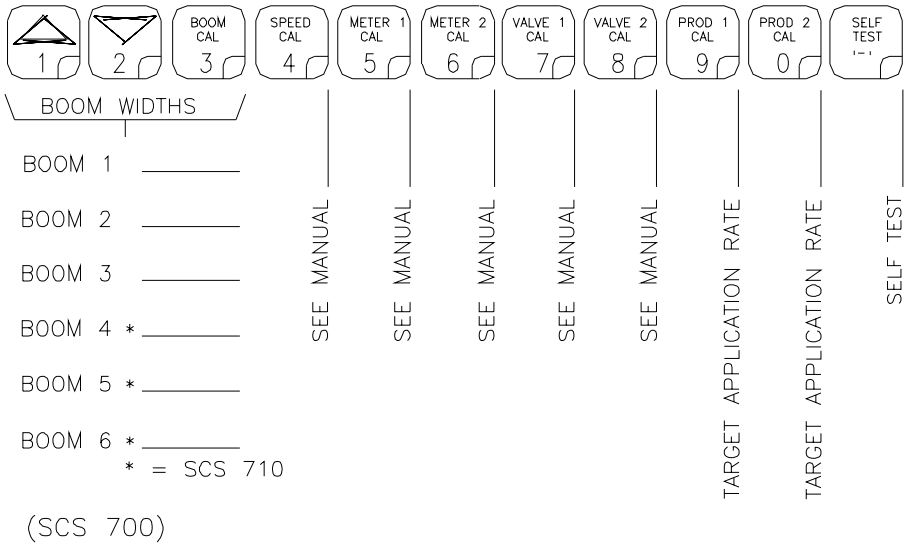

TABLE OF CONTENTS

APPENDIXES

SYMBOL DEFINITION

GPM	- Gallons per minute
lit/min	- Liters per minute
dl/min	- Deciliter per minute
PSI	- Pounds per square inch
kPa	- Kilopascal
GPA	- Gallon per acre
lit/ha	- Liter per hectare
ml/ha	- Milliliter per hectare
GPK	- Gallons per 1,000 sq. ft.
mm	- Millimeters
cm	- Centimeters
dm	- Decimeters
m	- Meter
MPH	- Miles per hour
km	- Kilometers
km/h	- Kilometers per hour
US	- Volume per ACRE
SI	- Volume per HECTARE
TU	- Volume per 1,000 sq. ft.
[]	- Metric numbers
{}	- 1,000 sq. ft. numbers

METER CAL CONVERSIONS

To convert the METER CAL number simply divide the original number (number printed on Flow Meter label) by the desired conversion factor.

FOR EXAMPLE:

$$\frac{\text{Original METER CAL No.}}{128} = \text{METER CAL No. for displays in Fluid Ounces}$$

$$\frac{\text{Original METER CAL No.}}{3.785} = \text{METER CAL No. for displays in Liters}$$

$$\frac{\text{Original METER CAL No.}}{\text{Weight of one gallon}} = \text{METER CAL No. for displays in Pounds}$$

LIQUID CONVERSIONS
U.S. Gallons x 128 = Fluid Ounces
U.S. Gallons x 3.785 = Liters
U.S. Gallons x 0.83267 = Imperial Gallons
U.S. Gallons x 8.34 = Pounds (Water)

LENGTH
1 millimeter (mm) = 0.039 inch
1 centimeter (cm) = 0.393 inch
1 meter (m) = 3.281 feet
1 kilometer (km) = 0.621 mile
1 inch = 25.4 millimeters; 2.54 centimeters
1 mile = 1.609 kilometers

PRESSURE
1 psi = 6.89 kPa

AREA
1 square meter = 10.764 square feet
1 hectare (ha) = 2.471 acres; 10,000 square meters
1 acre = 0.405 hectare; 43,560 square feet
1 square mile = 640 acres; 258.9 hectares

INTRODUCTION

The Raven SCS 700 (PRODUCT INJECTION SYSTEM) is designed to improve the accuracy and uniformity of spray applications. Its performance relies on the installation and preventive maintenance of the complete sprayer. It is important that this Installation and Service Manual be reviewed thoroughly before operating the system. This Manual provides a simple step-by-step procedure for installing and operating the system.

The SCS 700 consists of a computer based Control Console, a Speed Sensor, one or two Injection Modules (each includes a Motor Control and Metering Pump with sensors), an In-Line mixer, and cables. The Console mounts directly in the cab of the vehicle for easy operator use. The Radar Speed Sensor is mounted to the frame of the vehicle or implement (Wheel Drive and Speedometer Drive Speed Sensors are also available). The Injection Module mounts to the framework of the sprayer. The In-Line Mixer mounts just before the Boom On/Off Valves. Appropriate cabling is furnished for field installation.

The operator sets the target application rate for each product to be sprayed and the SCS 700 automatically maintains the flow regardless of vehicle speed or gear selection. A manual override switch allows the operator to manually control flow for each product for spot spraying. Actual volume per area being applied is displayed at all times for both products. The SCS 700 additionally functions as an area monitor, speed monitor, and volume totalizer.

TYPICAL SYSTEM (WITH CARRIER) DIAGRAM:

The diagram shown below is a typical SCS 700 system. It is suggested that the SCS 700 console be installed to use Product 1 as the carrier, and Product 2 for injection or auxiliary. Although this is not required, it is the recommended system.

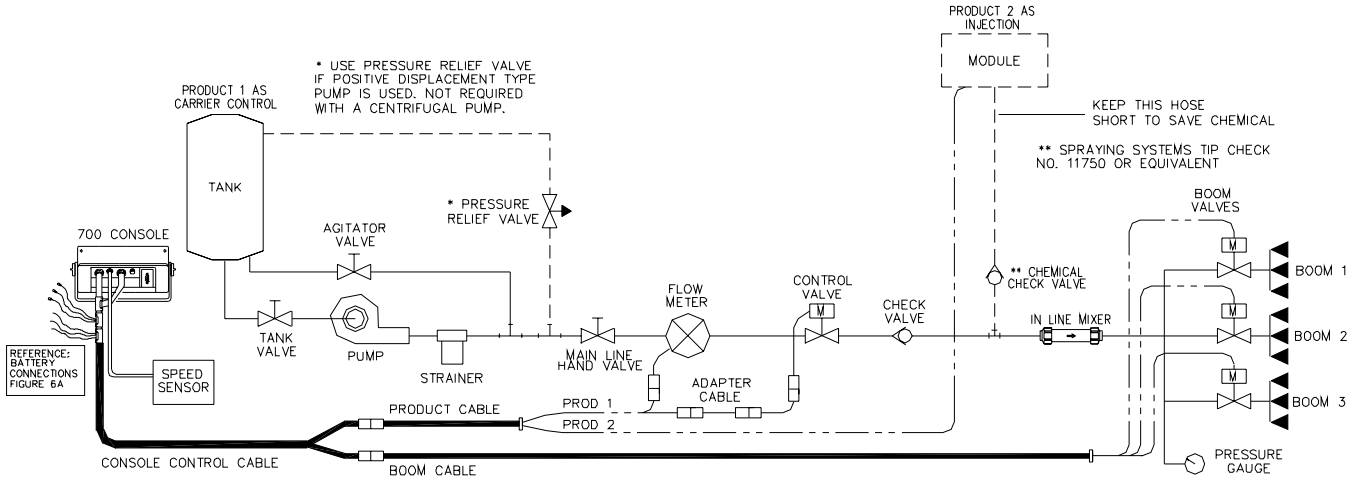

PRODUCT INSTALLATIONS

1. MOUNTING THE RAVEN RADAR SPEED SENSOR

See Appendix 1 for Wheel Drive Speed Sensor installation instructions.
See Appendix 2 Speedometer Drive Speed Sensor installation instructions.

For mounting the radar, the following guidelines will assure proper installation:
It is suggested that a large heavy mounting bracket, (P/N 107-0159-693) be attached to the vehicle frame for mounting the radar.

1) Park vehicle on level surface.

2) Select mounting site by considering the following:

- **a)** The line of sight from the lens to the ground must not be obstructed by structures or tires. Obstructions must not come closer than 20 inches to the bottom of the radar. See Figures 1 and 2.
- **b)** The radar lens must be parallel to the ground from front to back. Radar can be tilted out 0-15 degrees to provide more clearance and miss obstructions. See Figure 2.
- **c)** The radar should be mounted so that the **length** of the radar is **parallel** with direction of vehicle travel.

3) Use carpenters level to verify that mounting bracket is parallel to the ground.

4) Bolt mounting bracket to implement.

5) Bolt radar to mounting bracket using mounting hardware. See Figure 3.

6) Connect radar with Radar Interface Cable (P/N 115-0159-539) to the Console. The Red wire should be connected to the Orange cable wire. The White wire should be connected to the negative terminal of the battery. See "BATTERY CONNECTIONS".

CAUTION: The connection of the radar power in reverse polarity could result in damage to the radar.

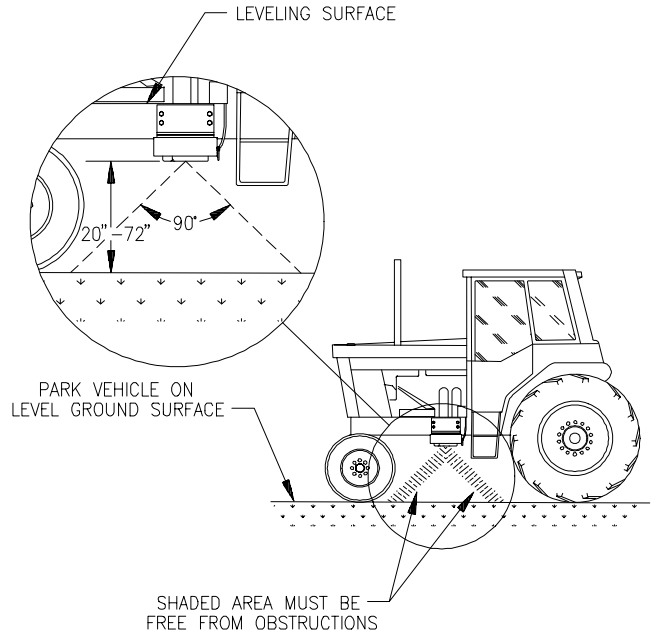

FIGURE 1

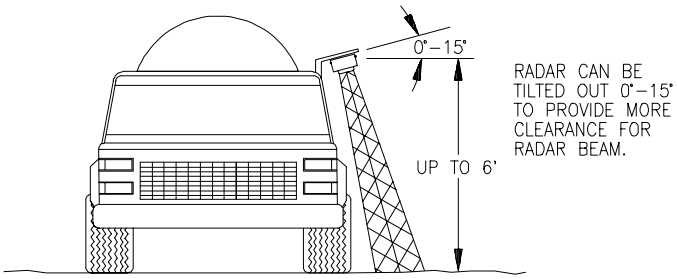

FIGURE 2

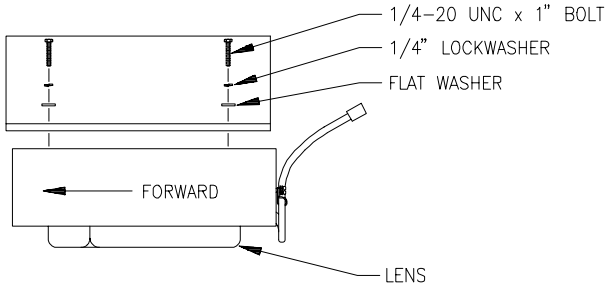

FIGURE 3

2. MOUNTING THE FLOW METER

1) Mount Flow Meter in the area of the boom valves per Figure 4. All flow through Flow Meter must go to booms only, i.e., no return line to tank or pump after Flow Meter.

2) Mount Flow Meter horizontal to the ground. Use the bracket to secure the Flow Meter.

3) For best results, allow a minimum of 7 1/2 inches [20 cm] of straight hose on inlet of Flow Meter. Bend radius of hose on outlet of Flow Meter should be gradual.

4) Flow must be in direction of arrow on Flow Meter.

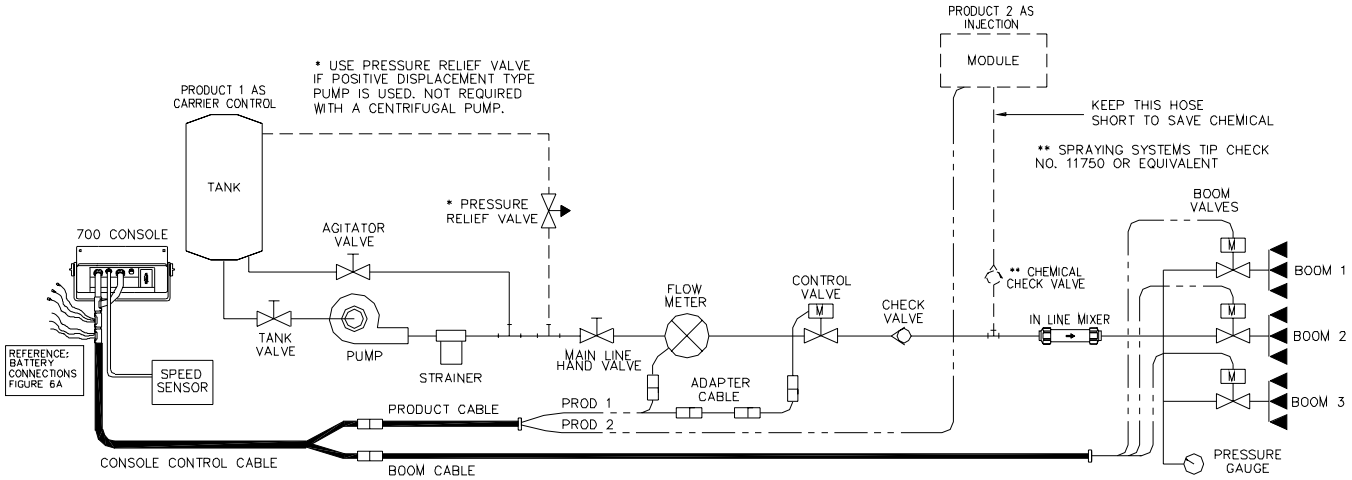

FIGURE 4

NOTE: It is critical, when using suspensions, that the system be thoroughly rinsed out each day after use.

NOTE: If system does not use carrier control for PROD 1, the injection option shown for PROD 2 is available for use in place of carrier control.

3. MOUNTING THE CONTROL VALVE

1) Mount the motorized Control Valve in the main hose line between the Flow Meter and the booms, with motor in the upright position. (For flow less than 3 GPM [11 lit/min] the motorized Control Valve is mounted in a bypass line, refer to Appendix 3 for alternate plumbing diagram).

2) Connect Product Cable connectors to Flow Meter, Control Valve, and Injection Module. Install Adapter Cable P/N 115-0159-456 on Control Valve.

3) Connect Boom Cable to the Boom Valves (Black wire to Valve #1, Brown wire to Valve #2, and Blue wire to Valve #3.

4. MOUNTING THE CONSOLE AND CABLING

I) Mount the Console to a secure support inside the cab of the vehicle.

2) Install Product Cable to the connectors on the Injection Modules (Prod 1-White, Prod 2-Black) and Boom On/Off Valves (Boom 1-Black, Boom 2-Brown, Boom 3-Blue). Secure with plastic cable ties. (See Figures 4 & 5).

3) Connect the Console Control Cable to the plug in the back of the Console. (See Figure 5). Run the Console Control Cable out of the vehicle cab and connect with Product Control Cable on the sprayer. (Extension cables are available from a Raven Dealer). Secure with plastic cable ties.

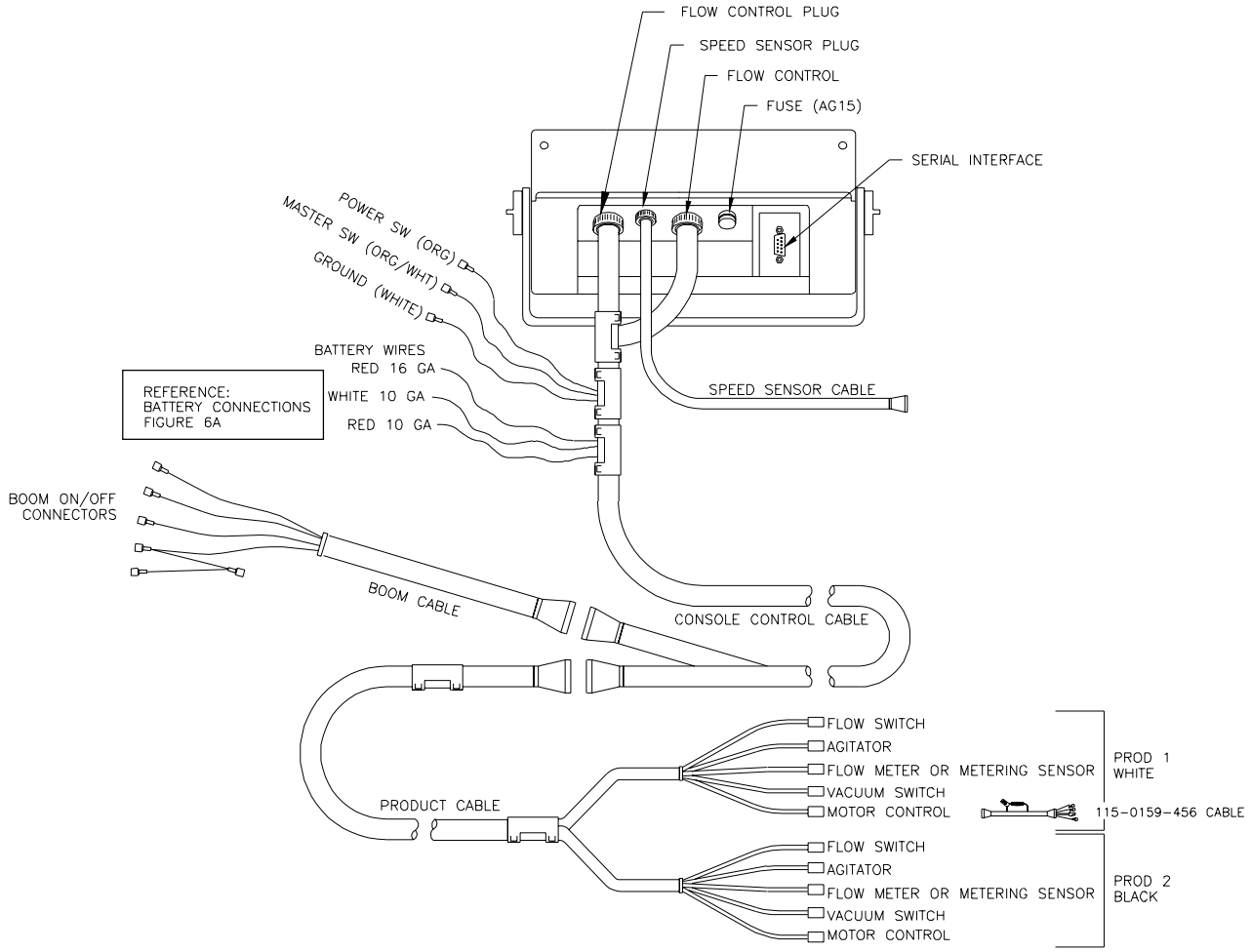

FIGURE 5

4) Turn POWER ON/OFF switch OFF and route the Red and White battery wires to a 12 volt battery. Attach the White wire to the **NEGATIVE** (-) terminal and the Red 16 gauge wire to the **POSITIVE** (+) terminal. **(DO NOT CONNECT WIRES TO THE STARTER).** Secure the battery wires with plastic cable ties. **DO NOT** tie the battery wires close to the existing battery leads or other electrical wiring.

NOTE:	Power relay P/N 063-0159-929 must be installed. Reference Battery Connection Figure 6A.

5) Connect the Speed Sensor Cable to the plug in the back of the Console.

6) Installation of the system is now complete.

BATTERY CONNECTIONS

BATTERY HOOK-UP FOR CONSOLE HARNESS

1) Connect the 10 gauge white wire to the negative post of the battery. Install fuseholder and 20 amp fuse on 16 gauge red wire.

2) A relay must be installed between the red 10 gauge wires and the battery. The relay is normally controlled from the accessory side of the ignition switch. See Figure 6A.

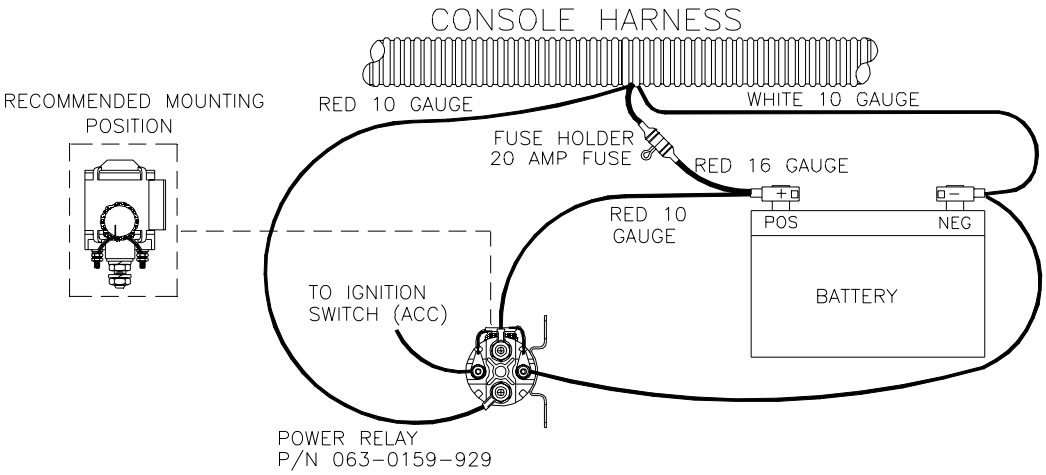

FIGURE 6A

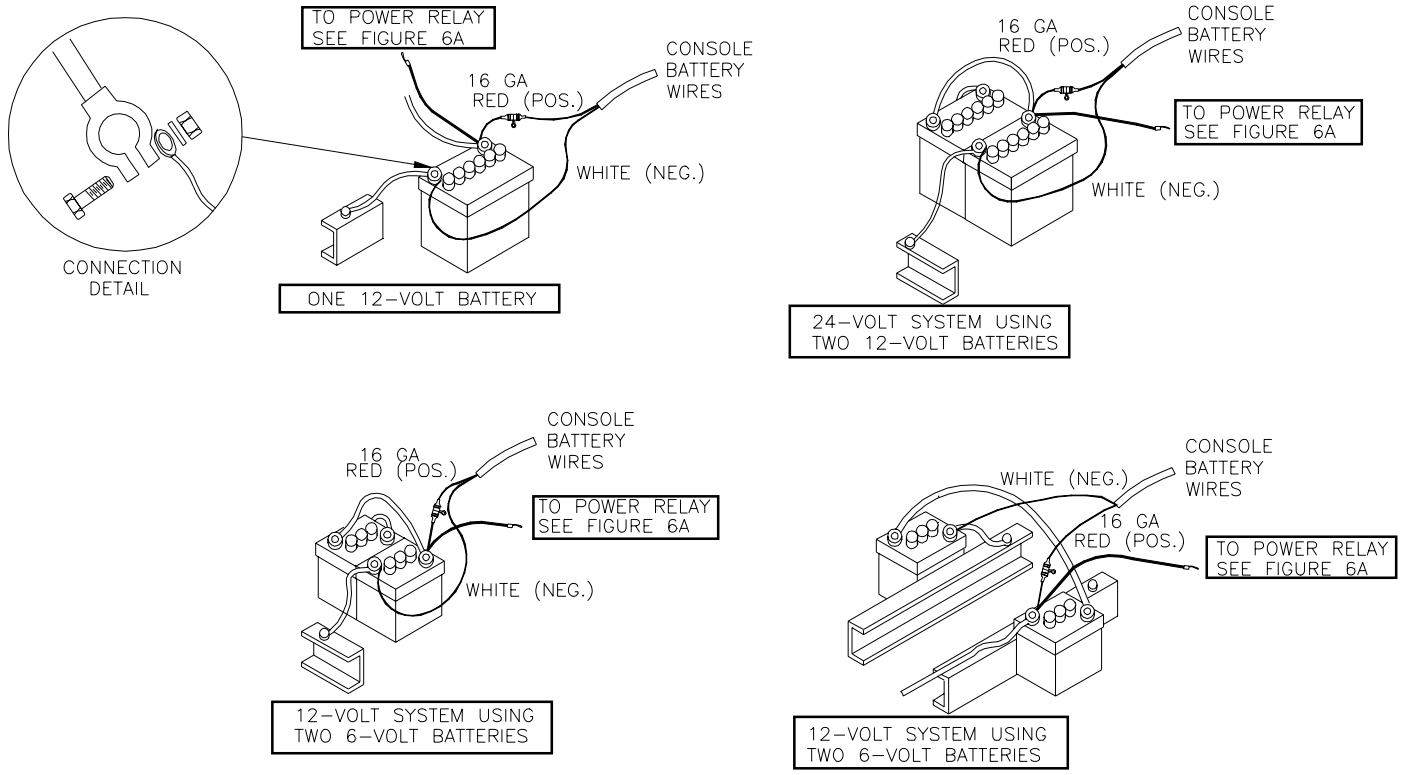

FIGURE 6B

NOTE: Disconnect console battery wires if the system is not used for an extended period, (i.e. two weeks). With the POWER switch to OFF, the system draws 9 milliamps of current to maintain information stored in the Console.

CONSOLE FEATURES

IMPORTANT: This Console requires selection of **US** (acres), **SI** [hectares], or **TU** {1,000 sq. ft.} area; and **SP1** (wheel drive, etc.) or **SP2** (radar) speed sensor; **C-Sd** (Standard Valve), **C-F** (Fast Valve), or **C-FC** (Fast Close valve).

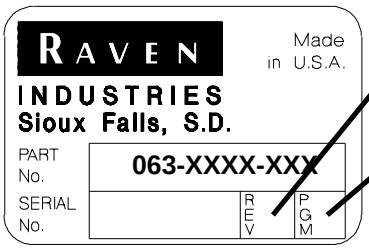

Console Revision can be determined by the letter stamped in REV box on label.

Console Program can be determined by the letter stamped in PGM box on label.

Selects OFF, MANual, or fully AUTOmatic control.

Manual override control provides capability for spot spraying.

POWER -Turns Console OFF or ON. Turning Console OFF does not affect data stored.

Booms can be controlled individually, or all at once with MASTER ON/OFF switch.

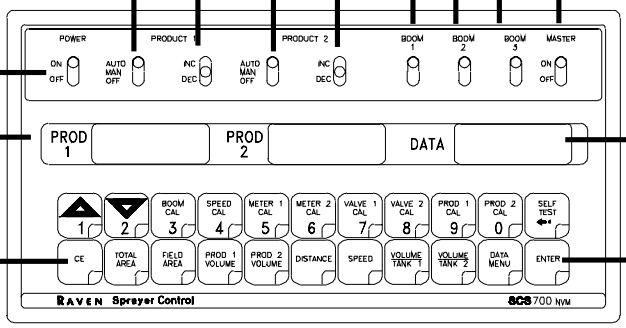

CE -Use like the CE key on a calculator.

ENTER -Used only to enter data into the Console.

Displays the actual rate of the application.

Displays function and calibration data.

CALIBRATION KEYS
Used to enter data into the Console to calibrate the system.

BOOM CAL	--	Length of Boom. Select boom number by using the UP/DOWN arrrow keys
SPEED CAL	--	Determined by Speed Sensor
METER 1 CAL	--	Injection Pump 1 Calibration Number
METER 2 CAL	--	Injection Pump 2 Calibration Number
VALVE 1 CAL	--	Injection Pump 1 Response Time
VALVE 2 CAL	--	Injection Pump 2 Response Time
PROD 1 CAL	--	Target Application Rate
PROD 2 CAL	--	Target Application Rate
SELF TEST	--	Simulates Vehicle Speed

FUNCTION KEYS
Used to Display Data

TOTAL AREA	--	Total Area Applied
FIELD AREA	--	Field Area Applied
PROD 1 VOLUME	--	Prod 1 Volume Applied to Field
PROD 2 VOLUME	--	Prod 2 Volume Applied to Field
DISTANCE	--	Distance Traveled
SPEED	--	Speed of Vehicle
VOLUME TANK 1	--	Volume Remaining in Prod 1 Injection Module Tank
VOLUME TANK 2	--	Volume Remaining in Prod 2 Injection Module Tank
DATA MENU	--	Various data options

CONSOLE CALIBRATIONS

A calibration procedure must be completed before operating the console. Calibration of the Console can be achieved by performing the following calculations. Once these calculations are complete, the information can be added to the console by following the INITIAL CONSOLE PROGRAMMING procedure.

1. CALCULATING "BOOM CAL"

Calculate the width of each boom in inches [cm] by multiplying the number of tips times the spacing. Write these boom widths down for future reference when programming the Console. The Console is capable of controlling up to three (3) booms.

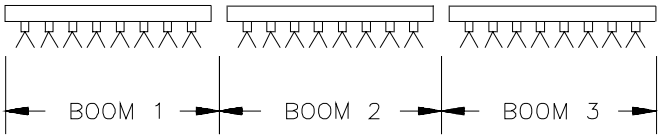

FIGURE 6

2. CALCULATING "SPEED CAL"

See Appendix 1 for Wheel Drive Speed Sensor installation instructions.
See Appendix 2 for Speedometer Drive Speed Sensor installation instructions.

Initial SPEED CAL is 598 [152]. Complete Steps 1 thru 6 to refine this number **after** "INITIAL CONSOLE PROGRAMMING" has been completed.

1) Set POWER switches to ON, all other switches to OFF.

2) Enter "0" in DISTANCE.

3) Drive 1 mile [1 kilometer]. To achieve the most accurate calibration, accelerate and decelerate slowly.

CAUTION:	Do not use vehicle odometer to determine distance. Use section lines or highway markers.

4) Read DISTANCE by depressing DISTANCE. DISTANCE should read a value of approximately 5280 [1000]. If it reads between 5260-5300 [990-1010], the SPEED CAL for the vehicle is 598 [152]. If the DISTANCE display reads any other value, perform the following calculation:

EXAMPLE: Assume DISTANCE reads 5000 [980].

$$\text{Corrected SPEED CAL} = \frac{\text{Old SPEED CAL} \times 5280}{\text{DISTANCE}}$$

ENGLISH UNITS:

$$= \frac{598 \times 5280}{5000} = 631.48$$

METRIC UNITS:

$$= \frac{[152] \times [1000]}{[980]} = [155]$$

5) The number to enter for SPEED CAL is 631 [155].

6) Recheck the new SPEED CAL derived in Step 5 by repeating Steps 2 thru 5.

3. CALCULATING CARRIER "METER CAL"

When calculating METER CAL for a carrier (typically METER 1 CAL is used as a carrier), refer to the Flow Meter calibration number which is stamped on the label attached to the Flow Meter. This number is to be used for gallon per area applications. To convert original METER CAL from gallons to desired units of measure (oz, lbs, or liters per area) see "METER CAL CONVERSIONS". Write down this calibration number for future reference when programming the Console.

> **NOTE:** Reference "PRODUCT INJECTION INSTALLATION AND SET-UP" For information regarding setting the METER CAL for injection or auxiliary.

4. CALCULATING "VALVE 1 AND VALVE 2 CAL"

The initial Control Valve calibration number for VALVE 1 CAL and VALVE 2 CAL is 2123 for C-Sd (injection module/standard valve), or 743 for C-F (fast valve) and C-FC (fast close valve). The VALVE CAL number is used to control response time of the Motor Control to the change in vehicle speed. After operating the system, this number may be refined.
See definitions below:

For **STANDARD VALVE** (C-Sd):

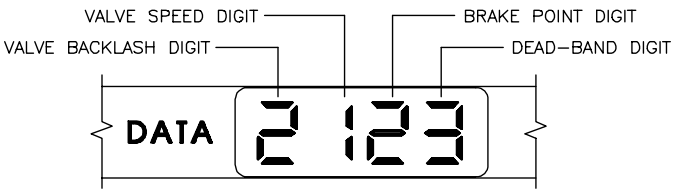

For **FAST VALVE** (C-F or C-FC):

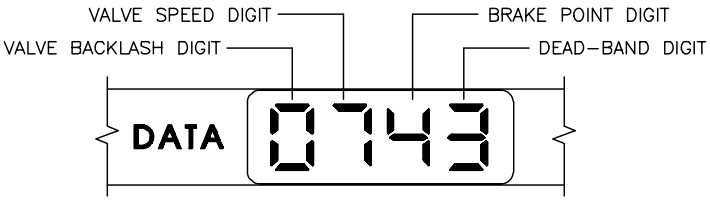

Valve Backlash Digit — Controls the time of the first correction pulse after a change in correction direction is detected.
(INC to DEC *-or-* DEC to INC).

Range:	1 to 9	1-Short Pulse 9-Long Pulse

Valve Speed Digit — Controls response time of Control Valve motor.

> **CAUTION:** Running the Control Valve too fast will cause the system to oscillate.

C-Sd Valve Control	Range:	1 to 9	1-Slow 9-Fast
C-F or C-FC Valve Control	Range:	0 to 9	0-Fast 9-Slow

Brake Point Digit — Sets the percent away from target rate at which the Control Valve motor begins turning at a slower rate, so as not to overshoot the desired rate.

Range:	0 to 9	0 = 5% 1 = 10% 9 = 90%

Dead-Band Digit Allowable difference between target and actual application rate, where rate correction is not performed.

Range:	1 to 9	1 = 1%
		9 = 9%

5. CALCULATING "PROD 1 AND PROD 2 CAL"

1) Determine the target application rate at which the product should be sprayed for the PROD 1 and PROD 2 CAL. Write down these calibration numbers for future reference when programming the Console. Consult with a Raven Dealer to ensure your spray nozzles are capable of applying at this target rate.

Selecting Spray Nozzles:

To determine correct spray nozzles provide the following information:

1) Nominal Application Pressure	PSI [kPa] {PSI}
2) Target Application Rate	GPA [lit/ha] {GPK)
3) Target Speed	MPH [km/ha] {MPH}
4) Nozzle Spacing	inches [centimeters] {inches}

From this information calculate the volume per minute per nozzle as follows:

$$\text{GPM} = \frac{\text{GPA \{GPK\} X MPH \{MPH\} X inches \{inches\}}}{5{,}940\ \{137\}}$$

$$\text{lit/min} = \frac{\text{lit/ha x km/h x cm}}{60{,}000}$$

Use GPM [lit/min] and pressure to select appropriate tip from tip chart.

EXAMPLE:

1) Application Pressure	30 PSI [200 kPa] {30 PSI}
2) Target Application Rate	20 GPA [200 lit/ha] {.46 GPK}
3) Target Speed	5.2 MPH [8.4 KM/H] {5.2 MPH}
4) Nozzle Spacing	20 inches [50 cm] {20 inches}

US (ENGLISH UNITS) GPM $= \frac{\text{20 GPA X 5.2 MPH X 20 inches}}{5{,}940} = 0.35$

SI (METRIC UNITS) [lit/min] $= \frac{\text{200 lit/ha X 8.4 km/h X 50 cm}}{6{,}000} = 1.40$

TU (TURF UNITS) GPM $= \frac{\text{.46 GPK X 5.2 MPH X 20 inches}}{137} = 0.35$

Using GPM .35 and pressure 30 select tip number XR8004 from the chart shown as Figure 8, since it comes closest to providing the desired output.

TIP COLOR	TIP NO.		LIQUID PRESSURE IN PSI	CAPACITY 1 NOZZLE IN GPM	CAPACITY 1 NOZZLE IN OZ./MIN.	GALLONS PER ACRE 20" SPACING			
	80 DEG.	110 DEG.				5 MPH	6 MPH	7 MPH	8 MPH
YELLOW	XR8002	XR11002	15	.12	15	7.3	6.1	5.2	4.5
			20	.14	18	8.4	7.0	6.0	5.3
			30	.17	22	10.3	8.6	7.4	6.4
			40	.20	26	11.9	9.9	8.5	7.4
			60	.25	32	14.6	12.1	10.4	9.1
BLUE	XR8003	XR11003	15	.18	23	10.9	9.1	7.8	6.8
			20	.21	27	12.6	10.5	9.0	7.9
			30	.26	33	15.4	12.9	11.0	9.7
			40	.30	38	17.8	14.9	12.7	11.1
			60	.37	47	22.0	18.2	15.6	13.6
RED	XR8004	XR11004	15	.24	31	14.5	12.1	10.4	9.1
			20	.28	36	16.8	14.0	12.0	10.5
			30	.35	45	21.0	17.2	14.7	12.9
			40	.40	51	24.0	19.8	17.0	14.9
			60	.49	63	29.0	24.0	21.0	18.2
BROWN	XR8005	XR11005	15	.31	40	18.2	15.2	13.0	11.4
			20	.35	45	21.0	17.5	15.0	13.1
			30	.43	55	26.0	21.0	18.4	16.1
			40	.50	64	30.0	25.0	21.0	18.6
			60	.61	78	36.0	30.0	26.0	23.0

FIGURE 8

VERIFYING FLOW RATE LIMITS:
The gallons per minute (GPM) (liter per minute [lit/min]) flow rate of the sprayer must be within the range of that specified for the Flow Meter included with the Console.

FLOW METER MODEL	FLOW RANGE
RFM 5	0.05-5 GPM [0.2-18.9 lit/min]
RFM 15	0.3-15 GPM [1.1-56.8 lit/min]
RFM 60P/60S	1-60 GPM [3.8-227 lit/min]
RFM 100	3-100 GPM [11.4-379 lit/min]
RFM 200/200 Poly	15-200 GPM [56.8-757 lit/min]
RFM 400	25-400 GPM [94.6-1514 lit/min]

2) Determine the target application rate for PROD 2 CAL that you are spraying (Refer to the instructions on the product container) using section DETERMINING INJECTION MODULE METER CAL.

INITIAL CONSOLE PROGRAMMING

STANDARD DATA ENTRY PROCEDURE:

When entering data into any of the keys on the Console, the data entry sequence is always the same.

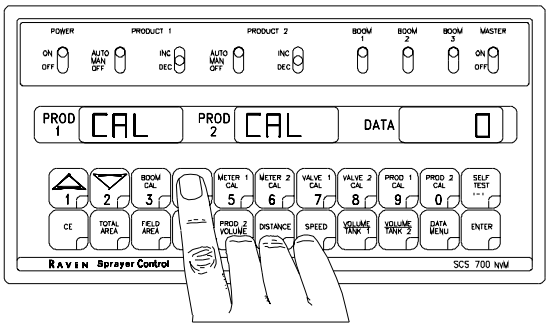

Depress the key in which you wish to enter data.

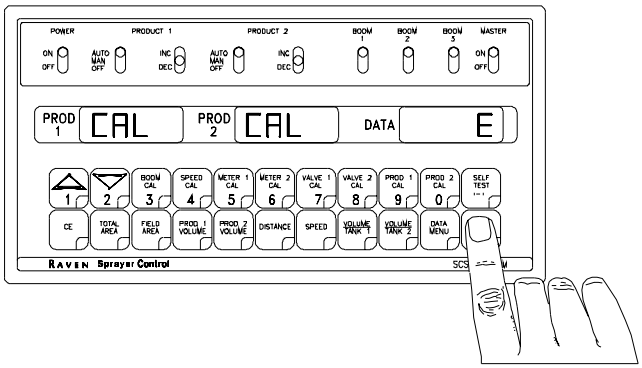

Depress the "ENTER" key. An "E" will illuminate in the DATA display.

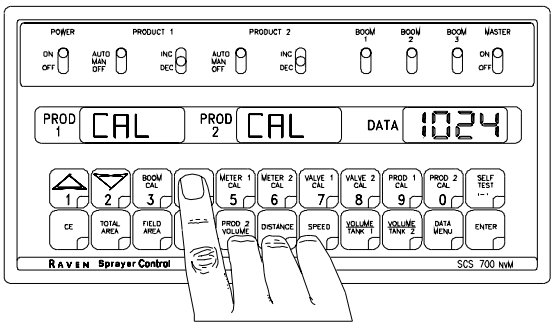

Depress the keys corresponding to the number you wish to enter (i.e., "1", "0", "2", "4",). The numbers will be displayed in the DATA display as they are entered.

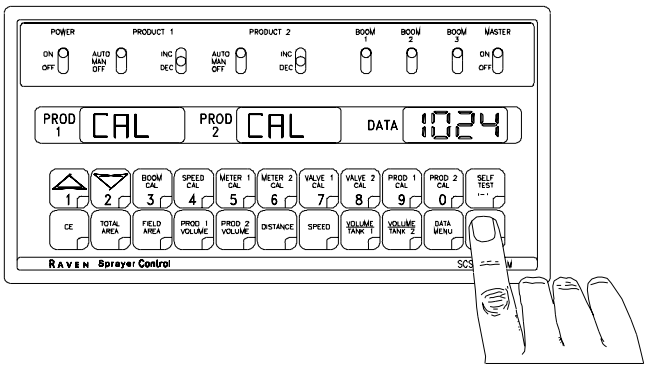

Complete the entry by again depressing the "ENTER" key.

1. REQUIRED CONSOLE PROGRAMMING

When power is first applied to the console, after all installation procedures have been completed, the Console will flash "CAL" in the PROD 1 and PROD 2 displays. This means it must be "calibrated" or programmed before it can be operated. This is a one-time operation which does not have to be repeated. Turning OFF the POWER ON/OFF Switch does not affect the Console memory. All data is retained.

IMPORTANT: If an entry selection error is made during Steps 1-6, place the POWER ON/OFF switch to OFF. Depress CE and hold while placing the POWER ON/OFF switch to ON. This will "reset" the Console.

The PROD 1 and PROD 2 display will show "CAL", the DATA display will show "US". The following steps must be followed:

1) Displaying units of measure selections: US (acres), SI [hectares], or TU {1000 sq. ft.).

a) Depressing momentarily CE steps the DATA display from US to SI.

b) Depressing momentarily CE steps the DATA display from SI to TU.

c) Depressing momentarily CE steps the DATA display from TU to US.

2) Selecting a unit of measure (US, SI, or TU).

a) To select US, SI, or TU, step CE until the desired code is displayed in DATA display.

b) Momentarily depress ENTER. The DATA display will now display SP1.

3) Displaying Speed Sensor selections: SP1 (wheel drives, etc.) or SP2 (radar sensor).

a) Depressing momentarily CE steps the DATA display from SP1 to SP2.

b) Depressing momentarily CE steps the DATA display from SP2 to SP1.

4) Selecting a Speed Sensor (SP1 or SP2).

a) To select SP1 or SP2, step with CE until desired code is displayed in DATA display.

b) Momentarily depress ENTER the DATA display will now display 1-Sd.

5) Displaying Valve selections for PROD 1: 1-Sd (Injection Module/Standard Valve), 1-F (Fast Valve), or 1-FC (Fast Close Valve).

a) Depressing momentarily [CE] steps the DATA display from 1-Sd to 1-F.

b) Depressing momentarily [CE] steps the DATA display from 1-F to 1-FC.

c) Depressing momentarily [CE] steps the DATA display from 1-FC to 1-Sd.

6) Selecting a Valve for PROD 1 (1-Sd, 1-F, or 1-FC).

a) To select 1-Sd, 1-F, or 1-FC, step [CE] until desired code is displayed.

b) Momentarily depress [ENTER]. The DATA display will now display "2-Sd".

7) Displaying Valve selections for PROD 2: 2-Sd (Injection Module/Standard Valve), 2-F (Fast Valve), or 2-FC (Fast Close Valve).

a) Depressing momentarily [CE] steps the DATA display from 2-Sd to 2-F.

b) Depressing momentarily [CE] steps the DATA display from 2-F to 2-FC.

c) Depressing momentarily [CE] steps the DATA display from 2-FC to 2-Sd.

8) Selecting a Valve for PROD 2 (2-Sd, 2-F, or 2-FC).

a) To select 2-Sd, 2-F, or 2-FC, step [CE] until desired code is displayed.

b) Momentarily depress [ENTER]. The DATA display will now display "0".

The Console is now ready for the required Console Calibration programming to be entered.

NOTE: When entering data under the following keys, refer to the STANDARD DATA ENTRY PROCEDURE detailed at the beginning of the INITIAL CONSOLE PROGRAMMING section.

9) Procedure to enter BOOM CAL:
Definition of keys:

[BOOM CAL 3] Depressing this key displays selected boom number in PROD 2 display window.
EXAMPLE: Boom 1 will be displayed as b-01.

[▲ 1] Depressing this key after selecting BOOM CAL selects the next boom number.
EXAMPLE: b-01 will increase to b-02.

Depressing this key after selecting BOOM CAL selects the last boom number.
EXAMPLE: b-02 will decrease to b-01.

Entering the calculated Boom Cal data:

a) Select desired boom number.
b) Enter boom length as determined in section "CALCULATING BOOM CAL".
c) If a boom is not needed or used, enter a "0" for the length.

10) Enter SPEED CAL in SPEED CAL 4.

11) Enter METER 1 CAL calibration number in METER 1 CAL 5.

12) Enter METER 2 CAL calibration number in the METER 2 CAL 6. If only one product is being used, enter "0".

13) Enter VALVE 1 CAL calibration number in VALVE 1 CAL 7.

14) Enter VALVE 2 CAL calibration number in VALVE 2 CAL 8. If only one product is being used, enter "0".

15) Enter PROD 1 CAL Target Application Rate PROD 1 CAL 9.

NOTE:	A decimal point is automatically shown in the display window. Therefore, 20 ounces per acre is entered as "2""0""0", but shown as "20.0".

16) Enter PROD 2 CAL Target Application Rate, in PROD 2 CAL 0. If only one product is being used, you must perform the following two steps to complete the INITIAL CONSOLE PROGRAMMING:

a) Enter "1.0" for PROD 2 CAL.
b) Re-enter "0" for PROD 2 CAL.

YOU HAVE NOW COMPLETED REQUIRED PROGRAMMING FOR THE CONSOLE

17) The flashing "CAL" should now extinguish. If not, repeat the programming procedures starting at Step 9.

2. OTHER DISPLAY FEATURES

1) To display TOTAL AREA covered, momentarily depress TOTAL AREA. To "zero out" this total at any time, enter a "0" in this key.

2) To display FIELD AREA covered, momentarily depress [FIELD AREA]. To "zero out" this total at any time, enter a "0" in this key.

3) Enter the estimated total volume of PRODUCT 1 tank in [VOLUME TANK 1].

Enter the estimated total volume of PRODUCT 2 tank in [VOLUME TANK 2].

<u>**Each time the tank is refilled, this number must be re-entered.**</u>

a) To display accumulated VOLUME of PRODUCT 1 sprayed, depress [PROD 1 VOLUME]. To "zero out" this total at any time, enter a "0" in this key.

b) To display accumulated VOLUME of PRODUCT 2 sprayed, depress [PROD 2 VOLUME].

To "zero out" this total at any time enter a "0" in this key.

4) To display DISTANCE (feet) [meters] traveled, depress [DISTANCE]. To "zero out" this total at any time, enter a "0" in this key.

5) To display MPH [km/h], momentarily depress [SPEED].

6) To display current VOLUME in PRODUCT 1 TANK, depress [VOLUME TANK 1].

7) To display current VOLUME in PRODUCT 2 TANK, depress [VOLUME TANK 2].

8) To display current UNITS OF MEASURE selection (US, SI, or TU); SPEED SENSOR selection (SP1 or SP2); or VALVE selections (1-Sd, 1-F, or 1-FC; and 2-Sd, 2-F, or 2-FC), depress [SELF TEST].

3. SELF TEST FEATURE

SELF TEST allows speed simulation for testing the system while the vehicle is not moving. Enter the simulated operating speed in the [SELF TEST]. If 6 MPH [9.6 km/h] is desired, enter 6.0 [9.6] (See CONSOLE PROGRAMMING). Verify speed by depressing [SPEED]. The DATA display will show a speed of 6.0 [9.6]. The SELF TEST speed will clear itself when motion of vehicle is detected by the Speed Sensor. A SPEED CAL Value of 900 [230] or greater is recommended when operating in this mode.

NOTE:	To prevent nuisance clearing of self-test speed, disconnect speed connector on back of the Console when Radar Speed Sensors are used.

4. SEQUENCE TO ACTIVATE DATA-LOCK

1) Depress [CE] for 5 seconds, "NEU.1" and "CodE" will flash in DATA display.

2) Enter a 4 digit code within 15 seconds.

EXAMPLE: For 1058, depress: [▲ 1] [PROD 2 CAL 0] [METER 1 CAL 5] [VALVE 2 CAL 8] and [ENTER].

5. SEQUENCE TO CHANGE DATA-LOCK

1) Depress [CE] for 5 seconds, "oLd" and "CodE" will flash in DATA display.

2) Enter old 4 digit code within 15 seconds: [▲ 1] [PROD 2 CAL 0] [METER 1 CAL 5] [VALVE 2 CAL 8] and [ENTER]. "NEU.1" and "CodE" will flash in DATA display. Enter a new 4 digit code within 15 seconds.

EXAMPLE: For 1258, depress: [▲ 1] [▼ 2] [METER 1 CAL 5] [VALVE 2 CAL 8] and [ENTER].

6. ENTER MODE SEQUENCE WITH ACTIVATED DATA-LOCK

1) Depress the key into which you wish to enter data.

2) Depress [ENTER], "CodE" will appear in DATA display. Enter your DATA-LOCK CODE.

If code is correct, "E" will replace "CodE" in DATA display. Now enter data normally.

NOTE:	The DATA-LOCK feature prohibits the entry of data without first entering the DATA-LOCK CODE. If DATA-LOCK is not desired, omit Steps 4, 5, and 6. The DATA-LOCK CODE may be cleared by entering a code of "0" or by resetting the Console as described in REQUIRED CONSOLE PROGRAMMING.

7. CONTROL VALVE DELAY

Control Valve Delay Digit

X 0 0 0

Hold key [SPEED CAL 4] until DATA display flashes. The Control Valve Delay number is a 4 digit number.

The first digit in the Control Valve Delay number represents the time (in seconds) between when the Booms are turned ON and when the Console actually begins to control the flow rate. A value of 1-9 means a delay of 1-9 seconds respectively, a value of 0 means no delay. The remaining 3 digits are always zero. The Control Valve Delay feature only operates when the booms are toggled OFF or ON in intervals of 30 seconds or less.

8. AUTOMATIC RATE +/-

This feature sets the increment at which flow is increased or decreased in AUTO operation. Select RATE +/- for product by depressing [PROD 1 CAL 9] for PRODUCT 1 or [PROD 2 CAL 0] for PRODUCT 2 until DATA display flashes. To enter a value [ENTER], then increment value, and [ENTER].

EXAMPLE: If rate is to changed by "1.0":
Enter a value of 1.0 for RATE +/-. When in AUTO, each time the INC/DEC switch is positioned to INC the PROD CAL for that product will increase by "1.0". Likewise, when positioned to DEC the PROD CAL will decrease by "1.0".

9. VOLUME/AREA RATE ALARM

Console alarm sounds if the application rate is 30% or more away from the target application rate for more than 5 seconds.

NOTE: Go to DATA MENU to silence alarm.

10. LOW TANK FAULT

This feature will sound the alarm when the volume in the tank drops below an entered value. The alarm will intermittently beep every 15 seconds and the DATA display will flash "LEVL". The alarm will stop when a value equal to or greater than the LOW TANK ALARM is entered into VOL/TANK or the booms are turned OFF. Entering "0" into LOW TANK ALARM disables it. To select LOW TANK ALARM depress [VOLUME TANK 1] for PRODUCT 1 or [VOLUME TANK 2] for PRODUCT 2 until the DATA display flashes. To enter a value,

depress [ENTER], then LOW TANK ALARM value, and [ENTER].

NOTE: Go to DATA MENU to silence alarm.

11. DATA MENU

The following are brief descriptions of features available under the DATA MENU key:

DISPLAY SCREEN PROD 1	PROD 2	DATA	FEATURE and DESCRIPTION
SERIAL PORT SCREENS			
SPr	Prn	bEGn	**CONSOLE DATA PRINTOUT** Sends data through serial port to attached optional printer to print field begin and field end pages.
SPr	FrEF	0	**FIELD REFERENCE** Allows user to enter up to a four-digit number to represent a field. Field reference is included in field begin and field end pages and the data logger time/ date string.
SPr	bAUd	1200	**BAUD RATE** Used in GPS mode and data logging mode. Selectable between 1200 or 9600 baud.
SPr	rAtE	on	**RATE CHANGE ALARM ON/OFF** Turns rate change alarm ON or OFF. When rate change alarm is selected ON; alarm sounds 4 long beeps when a rate calibration number is changed via the serial port using a valid change request data string.
SPr	triG	0	**DATA LOGGER TRIGGER VALUE** Used in data logging mode. The trigger determines how often actual rate data string (See Appendix 16 for data communication string formats) is sent to the serial port. The trigger may be either feet [meters] or seconds.
SPr	Unit	Ft	**DATA LOGGER TRIGGER UNITS** Used in data logging mode. The trigger unit is selectable between feet [meters] or seconds.
SPr	dLoG	oFF	**DATA LOGGER ON/OFF** Turns data logger ON or OFF.
GLOBAL POSITIONING SYSTEM SCREENS			
GPS	FiLE	1	**GPS FILE REFERENCE** Used only with Raven Grid Application System. See Grid Application System manual for more details.
GPS	SYSt	InAC	**GPS SYSTEM OPTIONS** Used only with Raven Grid Application System. See Grid Application System manual for more details.

DISPLAY SCREEN PROD 1	PROD 2	DATA	FEATURE and DESCRIPTION
DATE SCREENS			
dAtE	tiME	0:00	**TIME** Time of day.
dAtE	onth	0	**MONTH** Current month of year.
dAtE	daY	0	**DATE** Current date of month.
dAtE	YEAr	0	**YEAR** Current year.
dAtE	P dn	10	**POWER DOWN** Puts Console into low power mode.
FLOW RATE SCREENS			
Fr	FLo1	0	**VOLUME/MINUTE PRODUCT 1** Displays volume per minute of Product 1.
Fr	FLo2	0	**VOLUME/MINUTE PRODUCT 2** Displays volume per minute of Product 2.
Fr	LL 1	0	**VOLUME/MINUTE RATE FAULT PRODUCT 1** Turns alarm ON if Product 1 actual volume per minute falls below this limit.
Fr	LL 2	0	**VOLUME/MINUTE RATE FAULT PRODUCT 2** Turns alarm ON if Product 2 actual volume per minute falls below this limit.
ALARM SCREENS			
ALr	ALrM	on	**AUDIBLE ALARMS ON/OFF** Turns audible alarms ON or OFF for the following: 1) Volume/Area Rate Alarm 2) Volume/Minute Rate Fault 3) Low Tank Fault 4) Vacuum Alarm 5) Flow Alarm 6) Flow Error Alarm
ALr	vL 1	on	**VACUUM AND FLOW FAULT PRODUCT 1** Turns alarms ON or OFF for a vacuum or flow fault in Product 1 injection pump.
ALr	vL 2	on	**VACUUM AND FLOW FAULT PRODUCT 2** Turns alarms ON or OFF for a vacuum or flow fault in Product 2 injection pump.

DISPLAY SCREEN PROD 1	PROD 2	DATA	FEATURE and DESCRIPTION
ALr	FE 1	on	**FLOW ERROR PRODUCT 1** Turns alarms ON or OFF for flow error in Product 1.
ALr	FE 2	on	**FLOW ERROR PRODUCT 2** Turns alarms ON or OFF for flow error in Product 2.

MISCELLANEOUS SCREENS

MiSC	diSP	on	**DISPLAY SMOOTHING ON/OFF** Turns display smoothing ON or OFF. Selecting display smoothing ON means the RATE window displays target rate when actual rate is within a percentage of target rate. The third digit of VALVE CAL determines this percentage.
MiSC	AG 1	oFF	**AGITATOR PRODUCT 1** Turns agitator ON or OFF for Product 1.
MiSC	AG 2	oFF	**AGITATOR PRODUCT 2** Turns agitator ON or OFF for Product 2.
MiSC	APh	0	**AREA/HOUR** Displays area per hour.

1) Definition of Data Menu Key:

Depressing this key displays the selected Data Menu category in the PROD 1 display.

Depressing this key again increments through the Data Menu categories ("SPr", "GPS", "dAtE", etc...) in the PROD 1 display.

Depressing this key (after desired category is shown in PROD 1 display) toggles up through desired features within a category. Selected feature is shown in the PROD 2 display.

Depressing this key (after desired category is shown in PROD 1 display) toggles down through desired features within a category. Selected feature is shown in the PROD 2 display.

SERIAL PORT SCREENS

2) CONSOLE DATA PRINTOUT

a) PROD 1 display will show "SPr". PROD 2 display will show "Prn". DATA display will show "bEGn" (Print Field Begin).

1) To Print Field Begin, depress 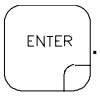

.

b) PROD 2 display will now show "Prn" and DATA display will show "End" (Print Field End).

1) To Print Field End, depress ENTER.

2) While "End" is displayed, if Field Begin is required, depress CE to toggle DATA display to "BEGn".

c) Momentarily depress ▲ 1 to advance to FIELD REFERENCE.

3) FIELD REFERENCE

a) PROD 1 display will show "SPr". PROD 2 display will show "FrEF". DATA display will show "0".

b) Enter the field number.

c) Momentarily depress ▲ 1 to advance to BAUD RATE.

4) BAUD RATE

a) PROD 1 display will show "SPr". PROD 2 display will show "bAUd". DATA display will show "1200".

b) Depressing CE momentarily changes the DATA display between "1200" and "9600".

c) Momentarily depress ▲ 1 to advance to RATE CHANGE ALARM ON/OFF.

5) RATE CHANGE ALARM ON/OFF

a) PROD 1 display will show "SPr". PROD 2 display will show "rAtE". DATA display will show "on".

b) Depressing CE momentarily changes the DATA display between "on" and "oFF". A value of "on" means alarm is enabled; a value of "oFF" means alarm is disabled.

c) Momentarily depress ▲ 1 to advance to DATA LOGGER TRIGGER VALUE.

6) DATA LOGGER TRIGGER VALUE

a) PROD 1 display will show "SPr". PROD 2 display will show "TriG". DATA display will show "0".

b) Enter the TRIGGER VALUE.

c) Momentarily depress ▲ 1 to advance to DATA LOGGER TRIGGER UNITS.

NOTE:	The TRIGGER VALUE default value is "zero". This value must be changed to a desired number ranging from 1-9999. The DATA LOGGER features will not work if this number is not changed.

7) DATA LOGGER TRIGGER UNITS

a) PROD 1 display will show "SPr". PROD 2 display will show "Unit". DATA display will show "Ft"["MEtr"].

b) Depressing [CE] momentarily changes the DATA display between "Ft"

[MEtr"] and "SEC". A value of "Ft"["MEtr"] means feet [meters], or a value of "SEC" means seconds have been chosen as the unit of measurement for the TRIGGER VALUE programmed previously.

c) Momentarily depress [▲ 1] to advance to DATA LOGGER.

8) DATA LOGGER ON/OFF

a) The DATA LOGGER uses the communications strings listed in Appendix 16 to pass data out through the serial port. The data is sent at a set time interval or a set distance traveled, as determined by the values entered in the DATA LOGGER TRIGGER VALUE and DATA LOGGER TRIGGER UNITS. Upon each trigger, the Actual Rate string, Data Strings 1, 2, and 3, and the Time/date string are sent, in that order. When a Console calibration value is changed, the Console will automatically send out the Cal 1, 2, and 3 strings. When a Console switch is changed, the Data 1, 2, 3, Time/Date, and Cal 1, 2, 3 strings will be sent by the Console. The Data, (with Time/Date string included) and Cal strings can also be requested by the data logger using the request strings shown in Appendix 16.

b) PROD 1 display will show "SPr". PROD 2 display will show "dLOG". DATA display will show "oFF".

c) Depressing [CE] momentarily changes the DATA display between "oFF" and "on".

A value of "oFF" means DATA LOGGER is disabled; a value of "on" means DATA LOGGER is enabled.

d) Momentarily depress [▲ 1] to advance to CONSOLE DATA PRINTOUT.

e) Momentarily depress [DATA MENU] to advance to the GLOBAL POSITIONING SYSTEM category.

GLOBAL POSITIONING SYSTEM SCREENS

9) GPS FILE REFERENCE

a) PROD 1 display will show "GPS". PROD 2 display will show "FILE". DATA display will show a "1".

b) Enter the GPS file number.

c) Momentarily depress [▲ 1] to advance to GPS SYSTEM OPTIONS.

10) GPS SYSTEM OPTIONS

a) GPS is inactive when the PROD 1 display shows "GPS", the PROD 2 display shows "SYSt", and the DATA display shows "InAC". The GPS features are explained further in the GRID APPLICATION SYSTEM MANUAL.

b) Momentarily depress  to advance to GPS FILE REFERENCE.

c) Momentarily depress  to advance to the DATE category.

DATE SCREENS

11) TIME

a) PROD 1 display will show "dAtE". PROD 2 display will show "tiME". The DATA display will show "0:00".

b) Enter the current time of day.

c) Momentarily depress  to advance to MONTH.

> **NOTE:** This is a 24 hour clock. Therefore, all time after 12:59 p.m., add 12 hours. Thus, 8:30 a.m. is entered as 8:30, but 1:30 p.m. is entered as 13:30 in the keyboard.

12) MONTH

a) PROD 1 display will show "dAtE". PROD 2 display will show "onth". The DATA display will show "0".

b) Enter the current month by number (i.e. 1 = January, 2 = February, etc.).

c) Momentarily depress  to advance to DAY.

13) DAY

a) PROD 1 display will show "dAtE". PROD 2 display will show "daY". The DATA display will show "0".

b) Enter the current day of the month.

c) Momentarily depress  to advance to YEAR.

14) YEAR

a) PROD 1 display will show "dAtE". PROD 2 display will show "YEAr". The DATA display will show "00".

b) Enter the current year.

c) Momentarily depress  to advance to POWER DOWN.

15) POWER DOWN

a) If the Console is not used for 10 days, it will go into a power down (low power) mode of operation. In this mode, all data is retained, but the time

of day clock will reset to 0:00. The delay time is initially set at 10 days; but can be changed by the user.

b) PROD 1 display will show "dAtE". PROD 2 display will show "P dn". The DATA display will show "10".

c) To change the delay time enter a new number from 0 to 200 days.

d) Momentarily depress  to advance to TIME.

e) Momentarily depress  to advance to the FLOW RATE category.

FLOW RATE SCREENS

16) VOLUME/MINUTE PRODUCT 1

a) PROD 1 display will show "Fr". PROD 2 display will show "FLo1". The DATA display will show the volume per minute of Product 1.

b) Momentarily depress  to advance to VOLUME/MINUTE PRODUCT 2.

17) VOLUME/MINUTE PRODUCT 2

a) PROD 1 display will show "Fr". PROD 2 display will show "FLo2". The DATA display will show the volume per minute of Product 2.

b) Momentarily depress  to advance to VOLUME/MINUTE RATE FAULT PRODUCT 1.

18) VOLUME/MINUTE RATE FAULT PRODUCT 1

a) If the actual volume per minute falls below the set limit, the injection pump stops slowing down, or the control valve stops closing, an alarm sounds and the PROD 1 display flashes "-LL-".

The low limit value should be determined with all booms ON. This value is automatically proportioned to the percentage of booms that are ON.

EXAMPLE: The entered low limit is 4. If half the total boom length is turned OFF, the Console will automatically reduce the entered low limit to 2.

b) PROD 1 display will show "Fr". PROD 2 display will show "LL 1". The DATA display will show "0".

c) Enter the set limit.

d) Momentarily depress  to advance to VOLUME/MINUTE RATE FAULT PRODUCT 2.

19) VOLUME/MINUTE RATE FAULT PRODUCT 2

a) If the actual volume per minute falls below the set limit, the injection pump stops slowing down, or the control valve stops closing, an alarm sounds and the PROD 2 display flashes "-LL-".

The low limit value should be determined with all booms ON. This value is automatically proportioned to the percentage of booms that are ON.

EXAMPLE: The entered low limit is 4. If half the total boom length is turned OFF, the Console will automatically reduce the entered low limit to 2.

b) PROD 1 display will show "Fr". PROD 2 display will show "LL 2". The DATA display will show "0".

c) Enter the set limit.

d) Momentarily depress 

to advance to VOLUME/MINUTE PRODUCT 1.

e) Momentarily depress 

to advance to the ALARM category.

ALARM SCREENS

20) AUDIBLE ALARM ON/OFF

a) PROD 1 display will show "ALr". PROD 2 display will show "ALrM". DATA display will show "on".

b) Momentarily depressing 

changes the DATA display between "on" (alarms enabled) and "oFF" (alarms disabled).

c) Momentarily depress 

to advance to VACUUM AND FLOW FAULT PRODUCT 1.

21) VACUUM AND FLOW FAULT PRODUCT 1

a) Too much vacuum on the inlet side of the injection pump will cause inaccurate operation. If pulling 10 inches of Hg for 5 seconds an audible alarm will sound and the PROD 1 display will flash "VAC".

If there is a vacuum alarm:

1) Strainer screen is plugged.

2) Investigate other possible obstructions.

b) If an injection pump is running and no flow is detected for 5 seconds an audible alarm will sound and the PROD 1 display will flash "FLo".

If there is a flow alarm:

1) Injection module tank is empty.

2) Product is not being injected.

c) PROD 1 display will show "ALr". PROD 2 display will show "vF 1". The DATA display will show "on".

d) Momentarily depressing 

changes the DATA display between "on" (alarms enabled) and "oFF" (alarms disabled).

e) Momentarily depress ▲ 1 to advance to VACUUM AND FLOW FAULT PRODUCT 2.

22) VACUUM AND FLOW FAULT PRODUCT 2

a) Too much vacuum on the inlet side of the injection pump will cause inaccurate operation. If pulling 10 inches of Hg for 5 seconds an audible alarm will sound and the PROD 2 display will flash "VAC".

If there is a vacuum alarm:

1) Strainer screen is plugged.

2) Investigate other possible obstructions.

b) If an injection pump is running and no flow is detected for 5 seconds an audible alarm will sound and the PROD 2 display will flash "FLo".

If there is a flow alarm:

1) Injection module tank is empty.

2) Product is not being injected.

c) PROD 1 display will show "ALr". PROD 2 display will show "vF 2". The DATA display will show "on".

d) Momentarily depressing CE changes the DATA display between "on" (alarms enabled) and "oFF" (alarms disabled).

e) Momentarily depress ▲ 1 to advance to FLOW ERROR PRODUCT 1.

23) FLOW ERROR PRODUCT 1

a) If the booms are off or there is no speed, but flow is detected for 5 seconds, an audible alarm will sound and the PROD 1 display will flash "FLo Err".

b) PROD 1 display will show "ALr". PROD 2 display will show "FE 1". DATA display will show "on".

c) Momentarily depressing CE changes the DATA display between "on" (alarms enabled) and "oFF" (alarms disabled).

d) Momentarily depress ▲ 1 to advance to FLOW ERROR PRODUCT 2.

24) FLOW ERROR PRODUCT 2

a) If the booms are off or there is no speed, but flow is detected for 5 seconds, an audible alarm will sound and the PROD 2 display will flash "FLo Err".

b) PROD 1 display will show "ALr". PROD 2 display will show "FE 2". DATA display will show "on".

c) Momentarily depressing CE changes the DATA display between "on" (alarms enabled) and "oFF" (alarms disabled).

d) Momentarily depress ▲ 1 to advance to AUDIBLE ALARM ON/OFF.

e) Momentarily depress DATA MENU to advance to the MISCELLANEOUS category.

MISCELLANEOUS SCREENS

25) DISPLAY SMOOTHING ON/OFF

b) Momentarily depressing CE changes the DATA display between "on" and "oFF". A value of "on" means smoothing is enabled; a value of "oFF" means smoothing is disabled. The percent smoothing is determined by the third digit of VALVE CAL value as shown:

Brake Point Digit
(3rd digit) of VALVE CAL 2 1 2 3

0 = 1% + Deadband	5 = 25% + Deadband
1 = 3% + Deadband	6 = 30% + Deadband
2 = 7% + Deadband	7 = 35% + Deadband
3 = 10% + Deadband	8 = 40% + Deadband
4 = 20% + Deadband	9 = 45% + Deadband

Actual rate is displayed if unit does not reach deadband within 10 seconds. "oFF" means RATE displays the actual rate at all times.

c) Momentarily depress ▲ 1 to advance to AGITATOR PRODUCT 1.

26) AGITATOR PRODUCT 1

a) PROD 1 display will show "MiSC". PROD 2 display will show "AG 1". DATA display will show "oFF".

b) Momentarily depressing CE changes the DATA display between "on" (agitator 1 enabled) and "oFF" (agitator 1 disabled).

c) Momentarily depress ▲ 1 to advance to AGITATOR PRODUCT 2.

27) AGITATOR PRODUCT 2

a) PROD 1 display will show "MiSC". PROD 2 display will show "AG 2". DATA display will show "oFF".

b) Momentarily depressing CE changes the DATA display between "on" (agitator 2 enabled) and "oFF" (agitator 2 disabled).

c) Momentarily depress ▲ 1 to advance to AREA/HOUR.

NOTE:	Some options within the DATA MENU LISTINGS may be unavailable if certain features are on or active. The options affected are:
CONSOLE DATA PRINTOUT:	Console Data Printout will not be available when DATA LOGGER is ON or when GPS functions are ACTIVE.
GPS OPTIONS:	GPS Options will not be available when DATA LOGGER is ON.
DATA LOGGER:	DATA LOGGER will not be available when GPS functions are active.

12. DECIMAL SHIFT

The DECIMAL SHIFT feature is used to increase system accuracy at low application rates. Shifting of the decimal point is done during the entry of METER CAL.

After entering METER CAL mode, depress the decimal shift [SELF TEST ←.]. Enter the meter calibration constant number and depress [ENTER]. The sequence to unshift the decimals while in METER CAL is to enter the meter calibration constant number and depress [ENTER]. The following table illustrates how shifting the decimal point can increase system accuracy.

DECIMAL PLACE LOCATIONS

	US		***METRIC***		***TURF***	
	UNSHIFT	*SHIFT*	*UNSHIFT*	*SHIFT*	*UNSHIFT*	*SHIFT*
PROD 1 DISPLAY	000.0	00.00	0000	000.0	00.00	00.00
PROD 2 DISPLAY	000.0	00.00	0000	000.0	00.00	00.00
PROD 1 CAL	000.0	00.00	0000	000.0	00.00	00.00
PROD 2 CAL	000.0	00.00	0000	000.0	00.00	00.00
PROD 1 VOLUME	0000	000.0	0000	000.0	000.0	000.0
PROD 2 VOLUME	0000	000.0	0000	000.0	000.0	000.0
VOLUME/TANK 1	0000	000.0	0000	000.0	000.0	000.0
VOLUME/TANK 2	0000	000.0	0000	000.0	000.0	000.0
DATA MENU FLo1	0000	000.0	0000	000.0	000.0	000.0
DATA MENU FLo2	0000	000.0	0000	000.0	000.0	000.0
DATA MENU LL1	0000	000.0	0000	000.0	000.0	000.0
DATA MENU LL2	0000	000.0	0000	000.0	000.0	000.0
PROD 1 RATE +/-	000.0	00.00	0000	000.0	00.00	00.00
PROD 2 RATE +/-	000.0	00.00	0000	000.0	00.00	00.00
PROD 1 LOW TANK	0000	000.0	0000	000.0	000.0	000.0
PROD 2 LOW TANK	0000	000.0	0000	000.0	000.0	000.0

When entering PROD 1 CAL and PROD 2 CAL, remember that 2 GPA [20 lit/ha] is entered as 2.0 [20.0] when unshifted and 2.00 [20.00] when shifted.

PRODUCT INJECTION INSTALLATION AND SET-UP

1. PLUMBING THE INJECTION MODULE

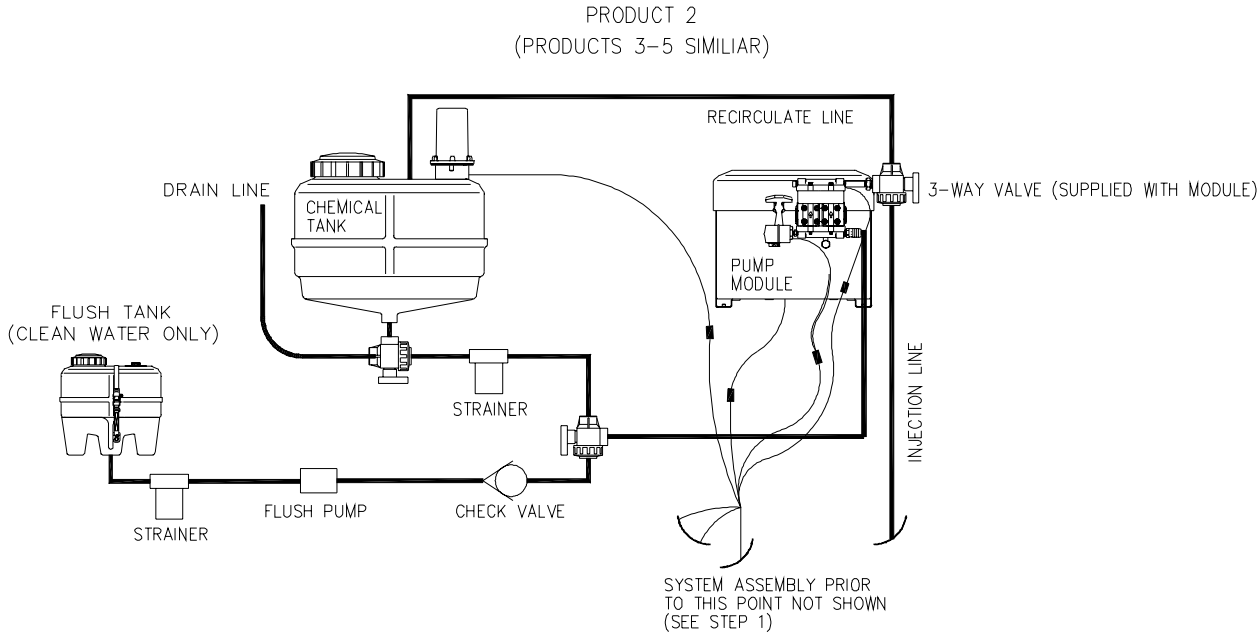

FIGURE 9A

1) Plumb the Pressure Relief Valve (PRV), Flow Meter, Control Valve, Carrier Check Valve, Product Check Valves, and In-line Mixer just ahead of the Boom On/Off Valves as shown in Figure 4.

2) Mount Injection Modules close to the Boom On/Off Valves to minimize amount of product in tubing. See Appendixes 7, 8, and 9 for mounting instructions on various styles of injection modules.

3) Inlet line from product tank to Injection Module shall be 3/4" suction hose.

4) Plumb output lines of Injection Modules to Product Check Valves with 3/8 inch [10 mm] tubing on low volume modules; or 1/2 inch [13 mm] tubing on high volume modules (Product Check Valves and tubing not furnished).

5) Figure 9B defines the handle positions for the three way valve.

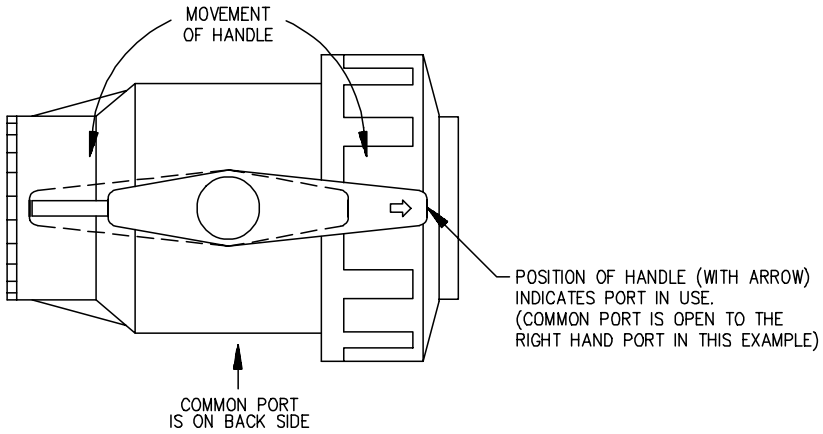

TYPICAL OPERATION OF THREE WAY VALVE
FIGURE 9B

6) Figure 9C illustrates typical injection module plumbing, showing the three way valve handle positions for injecting product.

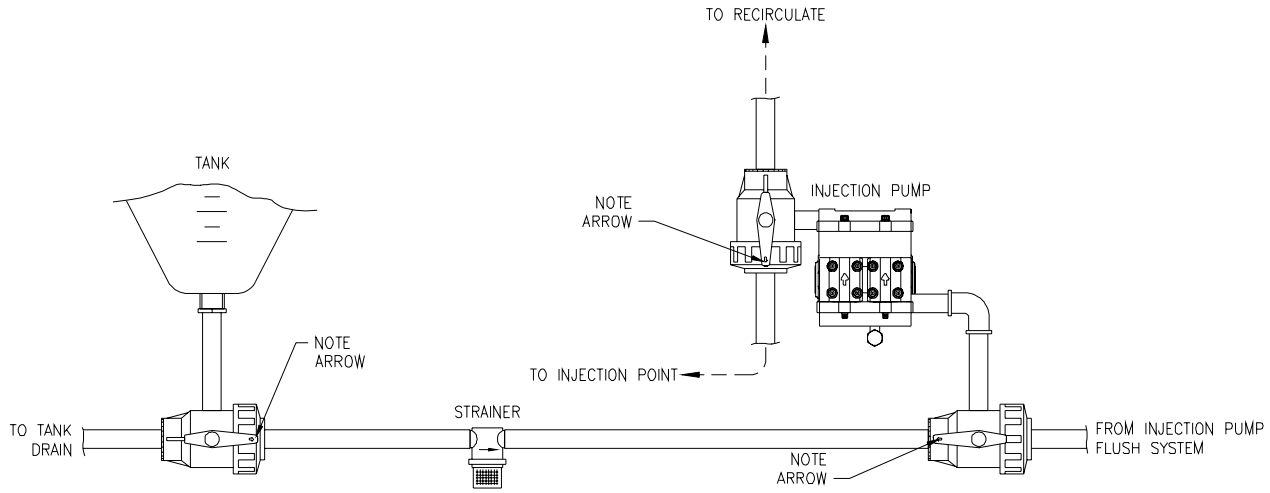

FIGURE 9C

2. RECOMMENDED INJECTION PUMP FLUSH SYSTEM

The recommended system is shown in Figure 10. Strainers are recommended for the product and flush system water. Strainers suitable for concentrated product are typically 20 mesh stainless steel. However, certain products may not flow through strainer without causing excessive vacuum or may clog strainer entirely. It is recommended that a flush system be incorporated with the injection system. This will enhance the performance of the injection pump. The basic components are shown below and are available through local spraying equipment supplier. This system shall be installed as shown and operated per the following instructions. The required frequency of flushing may vary per the product being injected.

1) Drain or empty Product Injection Tank.

2) Place VALVE 3 in Recirculation position.

3) Place VALVE 2 in position to let clean water circulate thru Injection Pump from flush pump. **VENT PRODUCT TANK.** Start the Flush System, pump approximately 1/2 gallon into Injection Tank.

4) Reposition VALVE 2 and VALVE 3 to allow rinse mixture to be injected. Spray rinse mixture at normal recommended rate.

5) Repeat this procedure until Pump and Tank are clean. (i.e. Triple rinse).

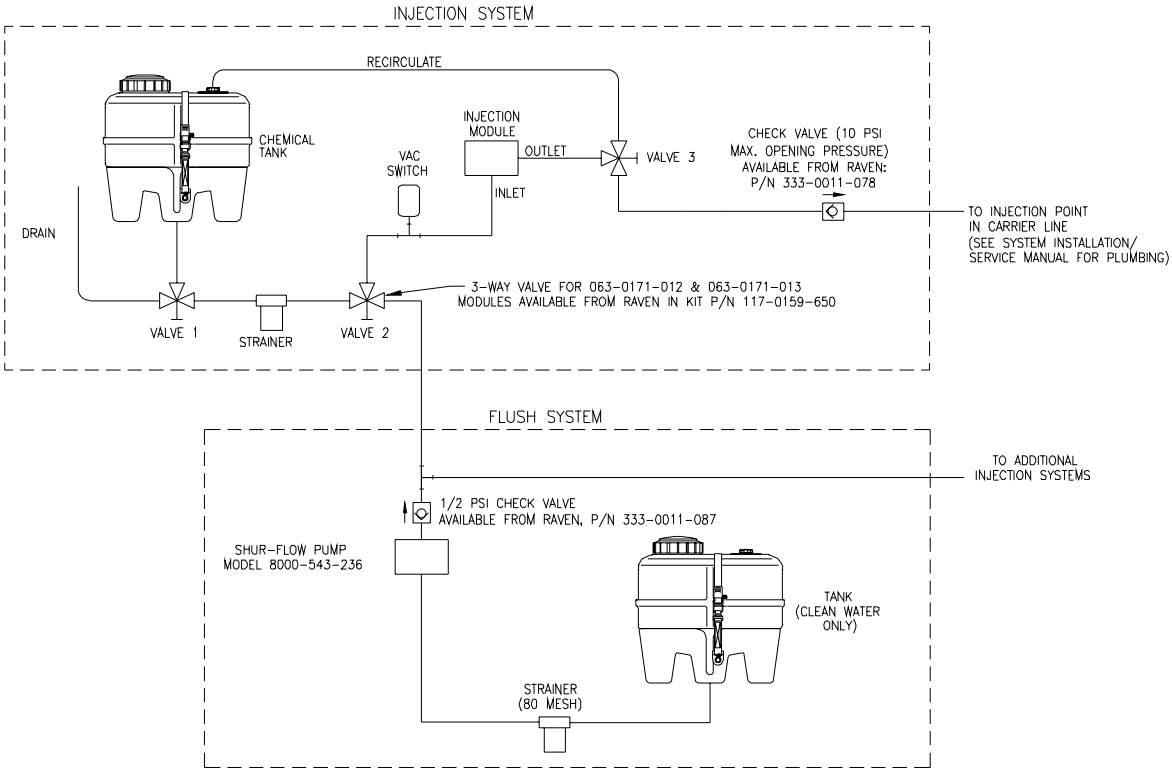

FIGURE 10

3. DETERMINING INJECTION MODULE "METER CAL"

1) Use the calibration tag attached to the Injection Pump (reproduced below) to determine the METER CAL for each product used.

NOTE: Product METER CALS are oz (dl) per unit.

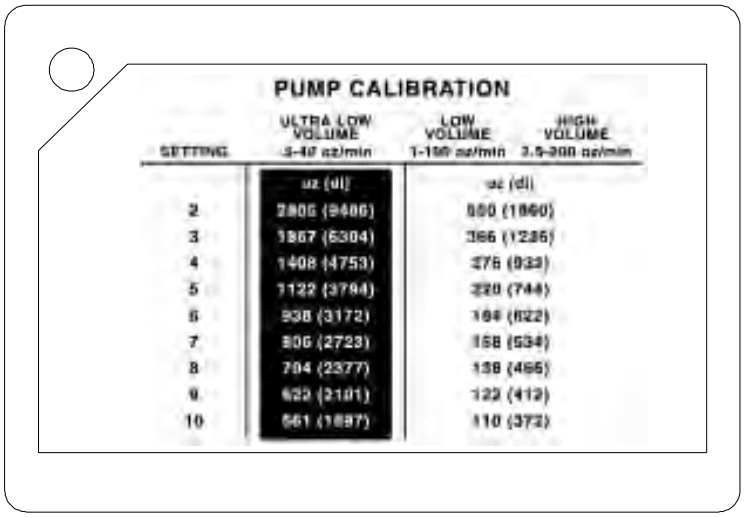

PUMP CALIBRATION

SETTING	ULTRA LOW VOLUME 3-40 oz/min	LOW VOLUME 1-160 oz/min	HIGH VOLUME 3.5-200 oz/min
	oz (dl)	oz (dl)	
2	2806 (9406)	360 (1360)	
3	1867 (6304)	366 (1236)	
4	1408 (4753)	276 (933)	
5	1122 (3794)	220 (744)	
6	938 (3172)	184 (622)	
7	806 (2723)	158 (534)	
8	704 (2377)	138 (466)	
9	625 (2101)	122 (412)	
10	561 (1897)	110 (372)	

FIGURE 11

2) Using the Pump Setting Number determined in "CALCULATING PUMP SETTING". Locate the METER CAL number that corresponds to this setting.
EXAMPLE: For Pump Setting 5 the METER CAL number is 220 [744].

3) Write down this METER CAL calibration number for future reference when programming the Console.

4) If two injection pumps are used, determine the METER CAL for remaining Injection Pump.

4. CALCULATING PUMP SETTING

The following procedure calculates the correct Pump Setting for Injection Pump. The High Volume Injection Module has an output range of 2.5 to 200 oz/min, use Figure 12A. The Low Volume Injection Module has an output range of 1.0 to 100 oz/min, use Figure 12B. The Ultra Low Volume Injection Module has an output range of .5 to 40 oz/min, use Figure 12C.

1) Calculate **MAXIMUM** and **MINIMUM** volume per minute (oz/min)[dl/min] of product required by using the following formulas:

MAXIMUM vol/min = $\frac{\text{Speed x Boom Width x Rate}}{\text{5,940 [60,000] \{137\}}}$

Speed = Maximum Spray Speed in MPH [km/h]
Boom Width = Maximum Number of Spray Nozzles x Nozzle Spacing in inches [cm] (i.e. total boom width)
Rate = Recommended Product Application Rate in Ounces per Acre [dl/ha] {oz/1,000 sq. ft.}

MINIMUM vol/min = $\frac{\text{Speed x Boom Width x Rate}}{\text{5,940 [60,000] \{137\}}}$

Speed = Minimum Spray Speed in MPH [km/h]
Boom Width = Minimum Number of Spray Nozzles x Nozzle Spacing in inches [cm] (i.e. one boom width)
Rate = Recommended Product Application Rate in Ounces per Acre [dl/ha] {oz/1,000 sq. ft.}

EXAMPLE: Maximum vol/min (High Volume Pump)

US (ENGLISH UNITS)
Speed = 15 MPH
Boom Width = 36 nozzles x 20 inches/nozzle = 720 inches
Rate = 2 pints/acre x 16 oz/pint = 32 oz/acre
Maximum oz/min = $\frac{\text{15 MPH x 720 inches x 32 oz/acre}}{\text{5,940}}$ = 58.1

SI (METRIC UNITS)
Speed = 24.1 km/h
Boom Width = 36 nozzles x 51 cm/nozzles = 1836 cm
Rate = 2.3 lit/ha x 10 dl/liter = 23 dl/ha
Maximum dl/min = $\frac{\text{24.1 km/h x 1836 cm x 23 dl/ha}}{\text{60,000}}$ = 17.0

TU (TURF UNITS)

Speed	=	15
Boom Width	=	36 nozzles x 20 inches = 720 inches
Rate	=	.73 oz/1,000 sq. ft.
Maximum oz/min	=	$\frac{\text{15 MPH x 720 inches x .73 oz/1,000 sq. ft.}}{137}$ = 58.1

EXAMPLE: Minimum vol/min (High Volume Pump)

US (ENGLISH UNITS)

Speed	=	8 MPH
Boom Width	=	12 nozzles x 20 inches/nozzle = 240 inches
Rate	=	2 pints/acre x 16 oz/pint = 32 oz/acre
oz/min	=	$\frac{\text{8 MPH x 240 inches x 32 oz/acre}}{5{,}940}$ = 10.3

SI (METRIC UNITS)

Speed	=	12.9 km/h
Boom Width	=	12 nozzles x 51 cm/nozzles = 612 cm
Rate	=	2.3 lit/ha x 10 dl/liter = 23 dl/ha
dl/min	=	$\frac{\text{12.9 km/h x 612 cm x 23 dl/ha}}{60{,}000}$ = 3.0

TU (TURF UNITS)

Speed	=	8
Boom Width	=	12 nozzles x 20 inches = 240 inches
Rate	=	.73 oz/1,000 sq. ft.
oz/min	=	$\frac{\text{8 MPH x 240 inches x .73 oz/1,000 sq. ft.}}{137}$ = 10.3

2) Locate the calculated MAXIMUM and MINIMUM oz/min [dl/min] on the horizontal line of Pump Chart. (See Figures 12A, 12B & 12C).

3) Draw a vertical line from these points to the highest pump setting.

4) Use highest pump setting which intersects both vertical lines on the graphs.

EXAMPLE: MAXIMUM setting of 58.1 oz/min [17.0 dl/min]; MINIMUM setting of 10.3 oz/min [3.0 dl/min] = pump setting 6 (See Figure 13).

NOTE: Use the "10" setting for all product application rates that are within the range of the "10" setting (i.e. 2.5 to 200 oz/min for the high volume module, 1.0 to 100 oz/min for the low volume module and .5 to 40 oz/min for the ultra low volume module.)

NOTE: The pump must be set to the "10" setting for priming.

5. ADJUSTING PUMP SETTING

1) Loosen the pump-setting locking nut, pull out on locking pin and rotate the 2-10 setting pointer to the proper number. (See Figure 13).

2) Tighten the pump setting locking nut taking care to keep setting pointer on the number.

HIGH VOLUME PUMP OUTPUT CHART
(2.5-200 oz./MIN)

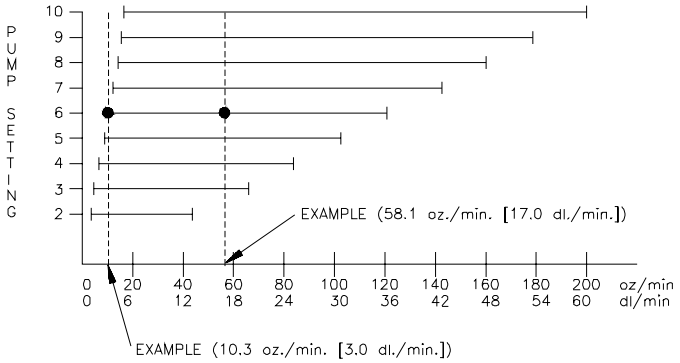

FIGURE 12A

LOW VOLUME PUMP OUTPUT CHART
(1.0-100 oz./MIN)

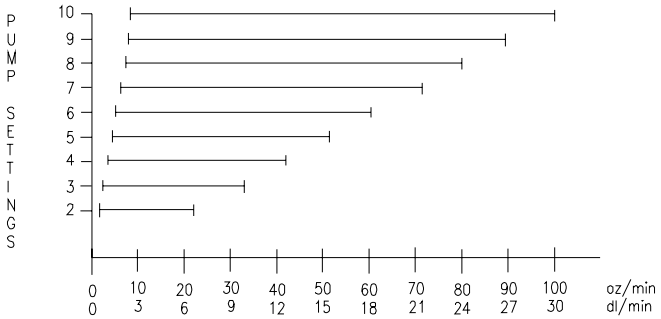

FIGURE 12B

ULTRA-LOW VOLUME PUMP OUTPUT CHART
(.5-40 oz./MIN)

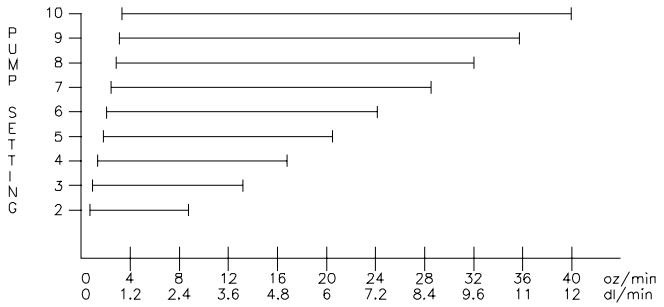

FIGURE 12C

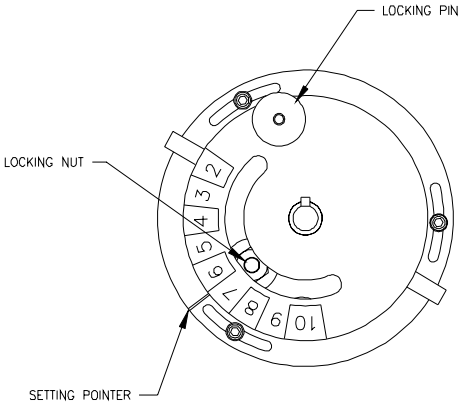

FIGURE 13

CAUTION:	An error in positioning the setting pointer will result in an error in product application.

SYSTEM OPERATION

1. INITIAL CARRIER SET-UP

1) Fill tank with water only. (If positive displacement type pump is used, fully open pressure relief valve, PRV).

2) Place MASTER ON/OFF to ON and all BOOM ON/OFF switches to OFF.

3) Place carrier PRODUCT OFF/MAN/AUTO switch to MAN.

4) Place POWER ON/OFF switch to ON.

5) Verify correct Boom Widths, SPEED CALS, METER CALS, VALVE CALS, and RATE CALS have been entered in the Console.

6) Run pump at normal operating RPM.

7) If centrifugal pump is used, proceed to Step 8. If positive displacement type pump is used, set pressure relief valve (PRV) to 65 PSI [448 kPa].

8) Verify that each Boom ON/OFF Valve operates and that no nozzles are plugged by operating BOOM ON/OFF switches.

9) Enter a SELF TEST speed equal to that of normal operating speed, verify entry by depressing SPEED (6 MPH [9.6 km/h] is recommended). (See "SELF TEST FEATURE").

10) Place all BOOM ON/OFF switches to ON, the carrier PRODUCT display should show a reading.

11) Hold the carrier PRODUCT INC/DEC switch in INC position for approximately 12 seconds. This assures that the motorized Control Valve is fully open. Verify maximum pressure and carrier PRODUCT rate. (Pressure gauge is not supplied)

NOTE:	A pressure gauge MUST be installed to properly monitor the system.

12) Adjust agitator line hand valve for desired agitation. Verify maximum pressure is still present.

13) Hold the carrier PRODUCT INC/DEC switch in DEC position for approximately 12 seconds. This assures motorized Control Valve is fully closed. Verify minimum pressure and carrier PRODUCT rate can be achieved. If not, consider increasing application rate of carrier or changing type of Control Valve. Consult a Raven Dealer.

NOTE:	It is recommended that PRODUCT 1 be used for a Carrier.

2. INITIAL CARRIER FIELD TEST

1) Drive down field or road at target speed with sprayer booms OFF to verify speed readout on Console.

2) Turn on Sprayer pump and booms, place the carrier PRODUCT OFF/MAN/AUTO switch to AUTO. Increase or decrease speed by one MPH [2 km/h], the system should automatically correct to the target application rate.

3) If, for any reason, the system is unable to correct to the desired GPA [lit/ha], check for an empty tank, a plugged line, a malfunctioning pump, improper vehicle speed, or a defect in the system.

4) If the system does not appear to be correcting properly, review "INITIAL CARRIER SET-UP".

5) At the end of each row, switch the MASTER ON/OFF switch to OFF to shut off flow. This also shuts off the area totalizer.

6) Verify area covered and volume used.

3. INITIAL INJECTION SET-UP

1) Fill Injection Module Tank with **water**.

2) Place the 3-way valve handle on Injection Pump to the "injection" position (See Figure 9C).

3) Place MASTER ON/OFF switch to ON and BOOM ON/OFF switches to OFF.

4) Place all PRODUCT OFF/MAN/AUTO switches to OFF.

5) Place POWER ON/OFF switch to ON.

6) Verify correct Boom Widths, SPEED CALS, METER CALS, VALVE CALS, and RATE CALS have been entered in the Console.

7) Run main carrier pump at normal operating RPM.

8) Verify that each BOOM ON/OFF Valve operates and that no nozzles are plugged by operating Boom ON/OFF switches. (MASTER switch must be ON).

9) Enter a SELF TEST speed equal to that of normal operating speed, verify entry by depressing SPEED (6 MPH [9.6 km/h] is recommended). (See Self Test mode under "SPEED" in "OTHER DISPLAY FEATURES").

10) Place all BOOM ON/OFF switches to ON.

11) Place PRODUCT 2-OFF/MAN/AUTO switch to MAN, the PRODUCT 2 display should display a reading.

12) Verify that by operating the injection PRODUCT 2 INC/DEC switch, that injection PRODUCT 2 can be varied over a wide range above and below the desired application rate in oz/acre [dl/ha]. Then set injection PRODUCT 2 for normal oz/acre [dl/ha] of application.

13) Repeat Steps 11 and 12 for each Product in use.

14) Place OFF/MAN/AUTO switch for each Product in use to AUTO. The system will seek the programmed injection PRODUCT RATE CAL.

15) Enter a SELF TEST speed 2 MPH [3.2 km/h] greater than that initially programmed (8.0 MPH) [12.9 km/h]. The system will automatically correct for this speed variation.

16) Turn one BOOM ON/OFF switch to OFF position. The system will automatically correct for this change in boom lengths.

17) Repeat Steps 11 thru 16 for all remaining injection products.

17) Drain water from Injection Module Tank and add product.

18) To verify at any time that the Injection Pump is properly calibrated, refer to Appendix 11.

PREVENTIVE MAINTENANCE

Preventive maintenance is most important to assure long life of the system. The following maintenance procedures should be followed on a regular basis:

1) Flush carrier system with water after use of suspension type products. Failure to clean systems can result in crystallization of products which may plug the Flow Meter, lines, and/or tips.

2) Flush and drain system before storing.

IMPORTANT: Freezing temperatures may damage system if water is not drained.

3) Periodically clean strainer on Injection Module.

4) Check oil level in Injection Pump daily. If addition of oil is required, add Mobil #1 (5W30) ONLY. Drain and refill the pump after every 150 hours of operation. (See Figure 14).

5) Flush Injection system by using flush system (See "RECOMMENDED INJECTION PUMP FLUSH SYSTEM") or by recirculating water through Injection Module until pump is clear of product. When storing at the end of season, recirculate antifreeze during the last flush.

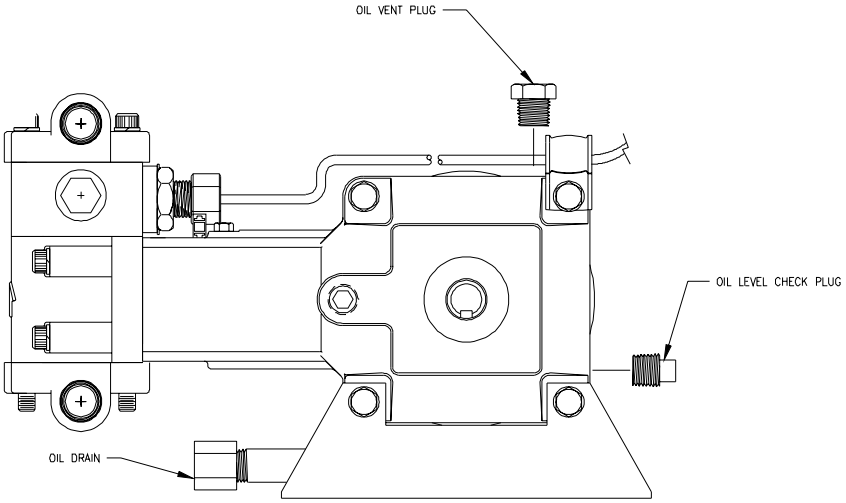

FIGURE 14

APPENDIX 1
WHEEL DRIVE SPEED SENSOR INSTALLATION AND CALIBRATION PROCEDURE

1. MOUNTING WHEEL DRIVE SPEED SENSOR

The Wheel Drive Speed Sensor consists of four magnets, a switch assembly with cable, and mounting hardware.

Sequence of mounting Speed Sensor:

l) Select a non-driven wheel (left front tractor wheel or implement wheel).

2) Check for predrilled holes in rim. If not predrilled, see "RIM DRILLING INSTRUCTIONS FOR WHEEL DRIVE SPEED SENSOR".

3) Mount the four magnets to inside of rim and tighten. (See Figures 15A, 15B, & 15C). Magnets must be mounted in alternating red-black order.

4) Mount switch assembly to stationary column with the hardware provided. (See Figure 15A). The switch assembly need not pivot with the wheel.

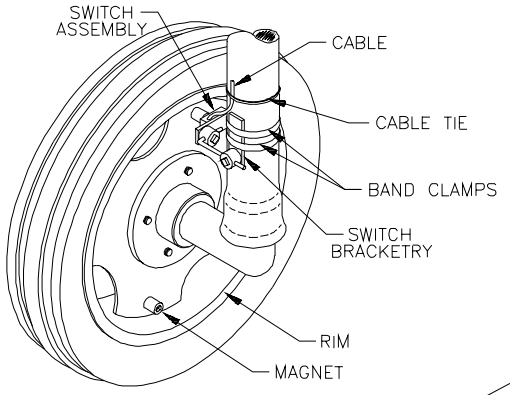

FIGURE 15A

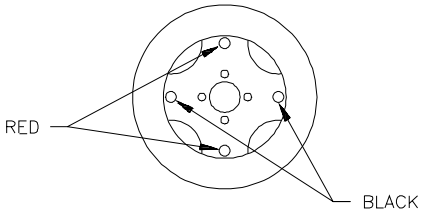

FIGURE 15B

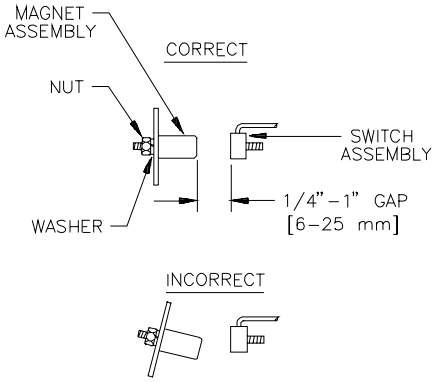

FIGURE 15C

5) Position switch assembly so that as the wheel rotates the magnets pass across the center of the black, molded switch assembly. (See Figures 15A & 15C).

6) Clearance gap between magnets and switch assembly must be between 1/4 inch [6 mm] and 1 inch [25 mm]. With wheels pointed straight ahead, rotate wheel to ensure gap is correct. Make sure vehicle wheels can be turned to their extremes in each direction without the magnets hitting the switch assembly.

7) Tighten switch assembly bracketry.

8) Secure cable to column with plastic cable ties.

2. RIM DRILLING INSTRUCTIONS FOR WHEEL DRIVE SPEED SENSOR MAGNETS

On wheels which do not have pre-punched mounting holes, proceed as follows:

RIMS WITH FOUR OR EIGHT HOLE STUD PATTERN:

Choose stud holes that are opposite each other as shown in Figure 16A. Using the center of opposite holes, scribe two lines on the rim web to divide the circumference into four equal parts. Measure in one inch from the outer edge of the web on each of the lines drawn. Mark this point as the center. Drill four 1/2" holes for mounting the magnets.

NOTE: Distance (D) between each set of drilled holes must be equal within 1/8" [3 mm] to ensure accuracy of system.

RIMS WITH SIX HOLE STUD PATTERN:

Locate the center of the holes to be drilled by using the rim webbing as a guide. (See Figure 16B). Obtain a small piece of wood and cut to fit exactly over the web as shown in Figure 16B. Measure the length of the piece of wood and mark the center on one edge. Using the center mark on the piece of wood, mark each of the four webs. Measure in one inch from the outer edge of the web on each of the lines drawn. Mark this point as center and drill four 1/2" holes for mounting the magnets.

NOTE: Distance (D) between each set of drilled holes must be equal within l/8" [3 mm] to ensure accuracy of system.

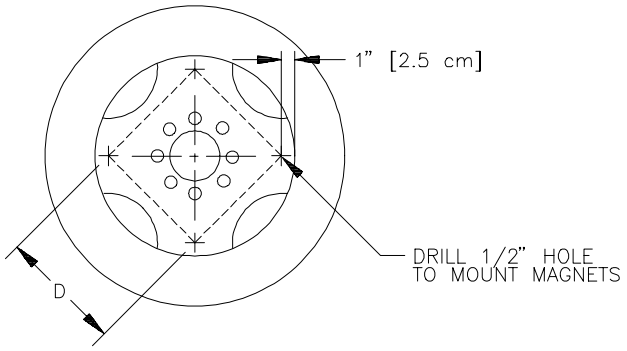

FIGURE 16A
EIGHT HOLE STUD PATTERN

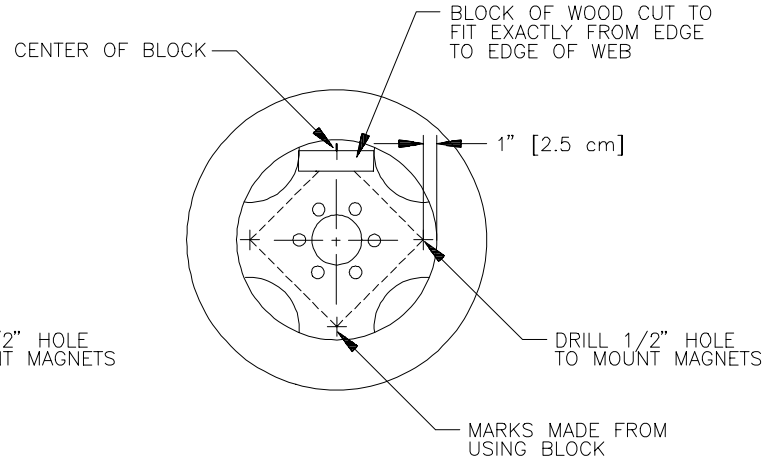

FIGURE 16B
SIX HOLE STUD PATTERN

3. CALCULATING "SPEED CAL"

1) Place a chalk mark or tape onto the vehicle tire that the Speed Sensor mounted to it as shown below.

2) Mark the initial spot on the ground.

3) Drive vehicle straight ahead counting 10 full revolutions of the wheel. The mark must stop at the same position it was in when the vehicle started.

4) Measure the distance from the ground starting mark to stopping mark in inches [dm] (Round off fractions).

5) Write down this distance as the SPEED CAL number; keep it for future reference when programming the Console.

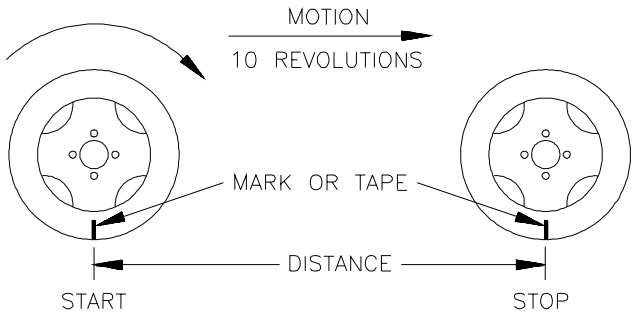

NOTE:	This measurement is critical to the performance of the Console. **MEASURE CAREFULLY**. Be sure tire is properly inflated before measuring. Measure tire in type of soil in which you will be spraying. Circumference of tire will vary when measured in soft soil versus hard packed soil. For best results, measure several times and average the results.

Large tires and very low speed applications may require additional magnets to insure accurate speed readings. Any even number of magnets may be used as long as they are of alternating color and equally spaced. After calculating "SPEED CAL", this number must be adjusted according to the number of magnets used.

$$\frac{\text{Normal Number of Magnets}}{\text{Actual Number of Magnets}} \times \text{Speed Cal} = \text{Adjusted Speed Cal}$$

Example: $\frac{4}{6} \times 1200 = 800$

SCS 330, SCS 500 and SCS 550 normally use two magnets. All other consoles normally use four magnets.

APPENDIX 2
SPEEDOMETER DRIVE SPEED SENSOR INSTALLATION AND CALIBRATION PROCEDURE

1. MOUNTING THE SPEEDOMETER DRIVE SPEED SENSOR

1) Remove the existing speedometer cable from the back of the vehicle speedometer. Pull cable through fire wall into engine compartment.

2) Install adapter and key on speedometer cable and connect to Transducer Assembly. (Some units do not use adapter and key).

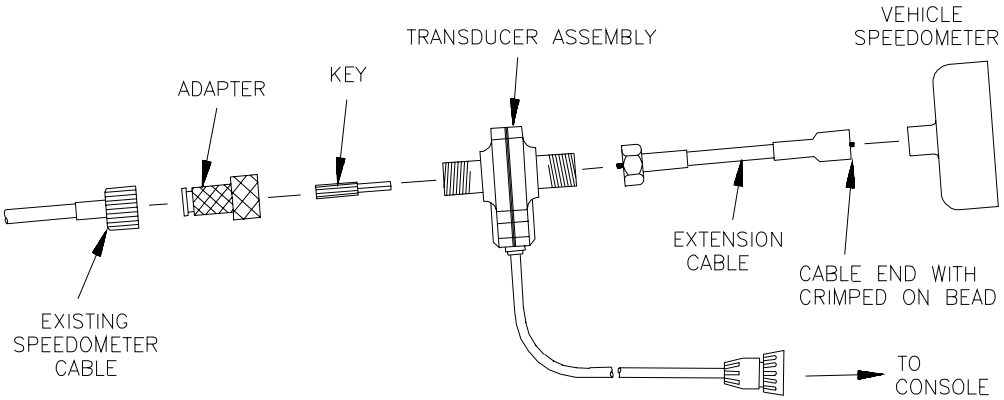

3) Connect Extension Cable to Transducer Assembly.

4) Push Extension Cable through fire wall and re-install on speedometer.

5) Connect the cable on the Transducer Assembly to the Console.

6) Secure all cables with plastic cable ties.

You are now ready to calibrate the Speedometer Drive Speed Sensor.

2. CALCULATING "SPEED CAL"

1) Complete "INITIAL CONSOLE PROGRAMMING" before doing this procedure.

2) Enter "0" in key labelled DISTANCE

3) Enter a SPEED CAL of 612 [155] in key labelled SPEED CAL 4

4) Drive 1 mile [1 km].

CAUTION:	Do not use vehicle odometer to determine distance. Use section lines or Highway markers.

5) Read DISTANCE by depressing key labelled DISTANCE

a) DISTANCE should read a value of approximately 5280 [1000]. If it reads between 5200-5350 [990-1010], the SPEED CAL for your vehicle is 612 [155].

b) If the DISTANCE display reads any other value, perform the following calculation:

Multiply the SPEED CAL by the target distance reading, then divide the sum by the actual value in DISTANCE display. This will give you the corrected value to enter for SPEED CAL. ***You must round off to the nearest 3 digit whole number.***

EXAMPLE: SPEED CAL = 612 [155]
Target distance reading = 5280 [1000]
Assume the actual DISTANCE display reads 5000 [980]

	ENGLISH UNITS:		**METRIC UNITS:**
=	$\frac{612 \times 5280}{5000} = 646.3$	=	$\frac{[155] \times [1000]}{[980]} = [158.1]$

6) The corrected number to enter for SPEED CAL is 646 [158].

7) Verify the corrected SPEED CAL number calculated above:

a) Zero out the DISTANCE display as in Step 2.

b) Enter the corrected SPEED CAL number as in Step 3.

c) Repeat Steps 4 and 5a. If DISTANCE value does not read correctly repeat Steps 5b, 6, and 7.

APPENDIX 3
ALTERNATE BY-PASS PLUMBING DIAGRAM

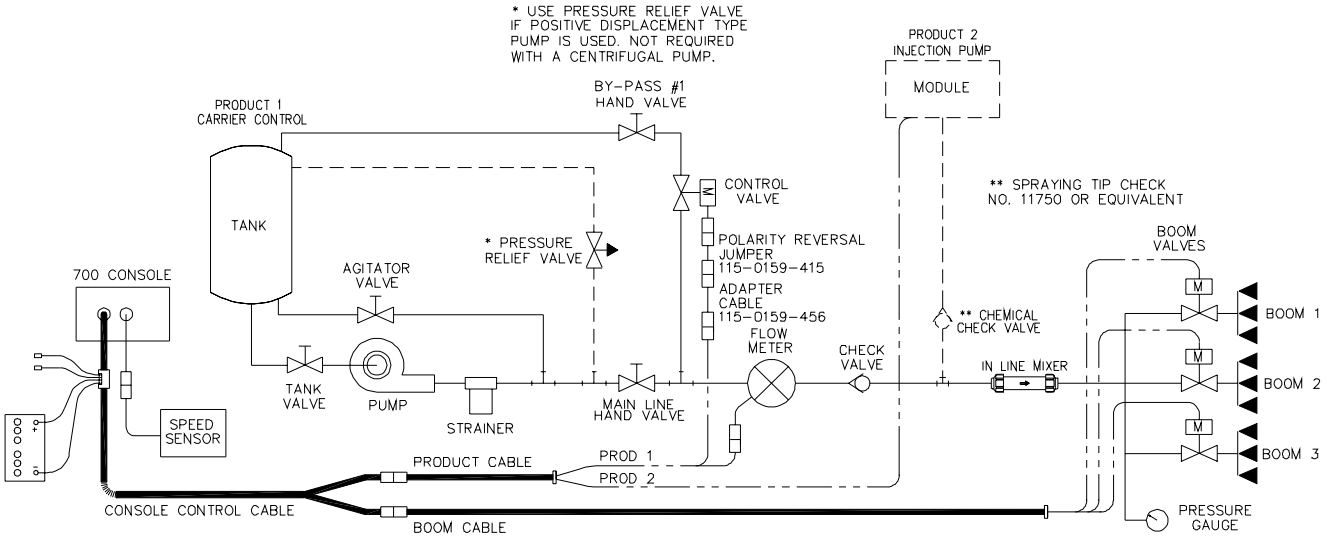

FIGURE 18

INITIAL SYSTEM SET-UP

Plumb the system as shown in Figure 18.
Adjust as follows:
Install Polarity Reversal Jumper in motorized Control Valve Cable (P/N 115-0159-415).

1) Fill tank with water only.

2) Place MASTER ON/OFF switch to ON and BOOM ON/OFF switches to OFF.

3) Place AUTO/MAN/OFF switch to MAN, and POWER ON/OFF switch to ON.

4) Verify that Boom Widths, SPEED CAL, METER CAL, and RATE CALS have been entered correctly into the Console. In SELF TEST mode enter the normal sprayer operating speed.

5) With pump not running, fully open main line hand valve, fully open by-pass #1 hand valve, and completely close agitator line hand valve. If positive displacement pump is used, fully open the pressure relief valve (PRV).

6) Run pump at normal operating RPM.

7) If centrifugal pump is used, proceed with Step 8. If positive displacement pump is used, proceed as follows:

a) Place MASTER ON/OFF switch to OFF.
b) Close by-pass #1 hand valve.
c) Set PRV to 65 psi [450 kPa].
d) Open by-pass #1 hand valve.
e) Place MASTER ON/OFF switch to ON.

8) Verify that each boom valve operates and that no nozzles are plugged by operating the BOOM ON/OFF switches.

9) Place all BOOM ON/OFF switches to ON.

10) Hold the FLOW CONTROL switch to INC position for approximately 12 seconds. This assures motorized Control Valve is fully closed. (Pressure gauge is not supplied).

NOTE: A pressure gauge MUST be installed to properly adjust the system.

11) Adjust agitator line hand valve for desired agitation.

12) Close the main line hand valve, if necessary, to set the desired maximum operating pressure. Maximum pressure should be approximately 10 psi [70 kPa] above normal spraying pressure.
EXAMPLE: If normal spraying pressure is 30 psi [210kPa], set maximum pressure at approximately 40 psi [280 kPa].

13) Hold the MAN ADJ switch to DEC position for approximately 12 seconds. This assures motorized Control Valve is fully open.

14) Close by-pass #1 hand valve to set the desired minimum operating pressure. Minimum pressure should be approximately one half the normal spraying pressure.
EXAMPLE: If normal spraying pressure is 30 psi [210 kPa], set minimum pressure at approximately 15 psi [105 kPa].

15) Verify maximum and minimum pressures and RATE by repeating Steps 11 and 14.

INITIAL SYSTEM FIELD TEST

1) Drive down field or road at target speed with sprayer booms OFF, to verify SPEED readout on Console.

2) Turn on sprayer and booms and place the MAN/AUTO switch to AUTO. Increase or decrease speed by one (1) MPH [2 km/h]. The system should automatically correct to the target application rate.

3) If for any reason, the system is unable to correct to the desired RATE, check for an empty tank, a plugged line, a malfunctioning pump, improper vehicle speed or a defect in the system.

4) If the system does not appear to be correcting properly, first review INITIAL SYSTEM SET-UP, then refer to TROUBLESHOOTING GUIDE.

5) At the end of each row, switch the MASTER ON/OFF to OFF to shut off flow. This also shuts off the area totalizer.

6) Verify area covered and volume used.

APPENDIX 4

PROCEDURE TO TEST SPEED SENSOR EXTENSION CABLES

Verify that the Console is in the SP1 Speed Sensor mode while testing the cable. Disconnect extension cable from Speed Sensor Assembly cable. Hold extension cable connector so that keyway is pointing in the 12 o'clock position.

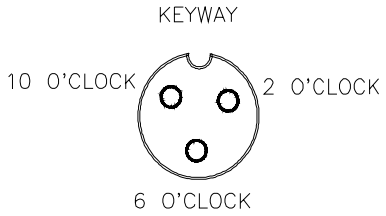

PIN DESIGNATIONS
2 o'clock socket location is power.
10 o'clock socket location is ground.
6 o'clock socket location is signal.

VOLTAGE READINGS
1) 10 o'clock socket to 6 o'clock socket = +5 VDC.
2) 10 o'clock socket to 2 o'clock socket = +5 VDC.

If a +5 VDC voltage reading is not present, disconnect the Flow Sensor cable. If the Speed reading is restored, Test the Flow Sensor cable per Appendix "PROCEDURE TO TEST FLOW METER CABLES".

PROCEDURE TO CHECK CABLE:

I) Enter SPEED CAL number of 1000 in key labelled 

2) Depress key labelled 

3) With small jumper wire (or paper clip), short between the 10 o'clock and 6 o'clock sockets with a "short-no short" motion. Each time a contact is made, the DISTANCE total should increase by increments of 1 or more counts.

4) If DISTANCE does not increase, remove the section of cable and repeat test at connector next closest to Console. Replace defective cable as required.

5) Perform above voltage checks.

6) If all cables test good, replace Speed Sensor.

NOTE: After testing is complete, re-enter correct SPEED CAL number before application.

APPENDIX 5
PROCEDURE TO TEST FLOW METER CABLES

Disconnect cable from Flow Sensor. Hold Flow Sensor cable so that the keyway is pointing in the 12 o'clock position:

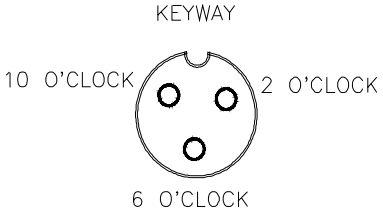

PIN DESIGNATIONS
2 o'clock socket location is ground.
10 o'clock socket location is power.
6 o'clock socket location is signal.

VOLTAGE READINGS
1) 2 o'clock socket to 6 o'clock socket = +5 VDC.
2) 2 o'clock socket to 10 o'clock socket = +5 VDC.

If a +5 VDC voltage reading is not present, disconnect the Speed Sensor cable. If the Flow reading is restored, Test the Speed Sensor cable per Appendix "PROCEDURE TO TEST SPEED SENSOR EXTENSION CABLES".

PROCEDURE TO CHECK CABLE:

1) Enter a METER CAL number of one (1) in key labelled:

for Product 1 cable;


for Product 2 cable.

2) Depress key labelled:

for Product 1 cable;


for product 2 cable.

3) Place BOOM switches to ON.

4) With small jumper wire (or paper clip), short between the 2 o'clock and 6 o'clock sockets with a "short-no short" motion. Each time a contact is made, the TOTAL VOLUME should increase by increments of 1 or more counts.

5) If TOTAL VOLUME does not increase, remove the section of cable and repeat test at connector next closest to Console. Replace defective cable as required.

6) Perform above voltage checks.

7) If all cables test good, replace Flow Sensor.

NOTE: After testing is complete, re-enter correct METER CAL numbers before application.

APPENDIX 6
PROCEDURE TO RE-CALIBRATE FLOW METER

1) Enter a METER 1 CAL number of 10 [38] in the key labelled:

2) Enter a PROD 1 VOLUME of 0 in the key labelled:

3) Switch OFF all booms.

4) Remove a boom hose and place in calibrated 5 gallon [19 liter] container.

5) Switch ON appropriate boom switch and MASTER switch. Pump exactly 10 gallons [38 liters].

6) Readout in DATA display is the new METER CAL number. This number should be within +/-3% of the number stamped on the tag on Flow Meter.

7) Repeat this procedure several times to confirm accuracy. (Always "zero out" the PROD 1 VOLUME display before retesting).

NOTE:	For greatest precision, set METER CAL to 100 and pump 100 gallons (378 liters) of water.

8) To verify Flow Meter calibration, fill applicator tank with a predetermined amount of measured liquid (i.e. 250 gallons). **DO NOT RELY ON GRADUATION NUMBERS MOLDED INTO APPLICATOR TANK.** Empty the applicator tank under normal operating conditions. If the number displayed under PROD 1 VOLUME is different from the predetermined amount of measured liquid by more than +/-3%, complete the following calculation.

EXAMPLE:	METER 1 CAL	= 720 [190]
	PROD 1 VOLUME	= 260 [984]
	Predetermined amount of measured liquid	= 250 [946]

$$\text{Corrected METER CAL} = \frac{\text{METER CAL x TOTAL VOLUME}}{\text{Predetermined amount of measured liquid}}$$

ENGLISH UNITS:

$$= \frac{720 \times 260}{250} = 749$$

METRIC UNITS:

$$= \frac{[190] \times [984]}{[946]} = [198]$$

Corrected METER 1 CAL = 749 [198]

9) Enter corrected METER 1 CAL before resuming application.

NOTE:	For RFM 200 series Flow Meter, use old METER CAL number of 164 [43] and calibrate as described in Step 8.

APPENDIX 7
IMPREGNATION MODULE INSTALLATION

1. PLUMBING IMPREGNATION MODULE

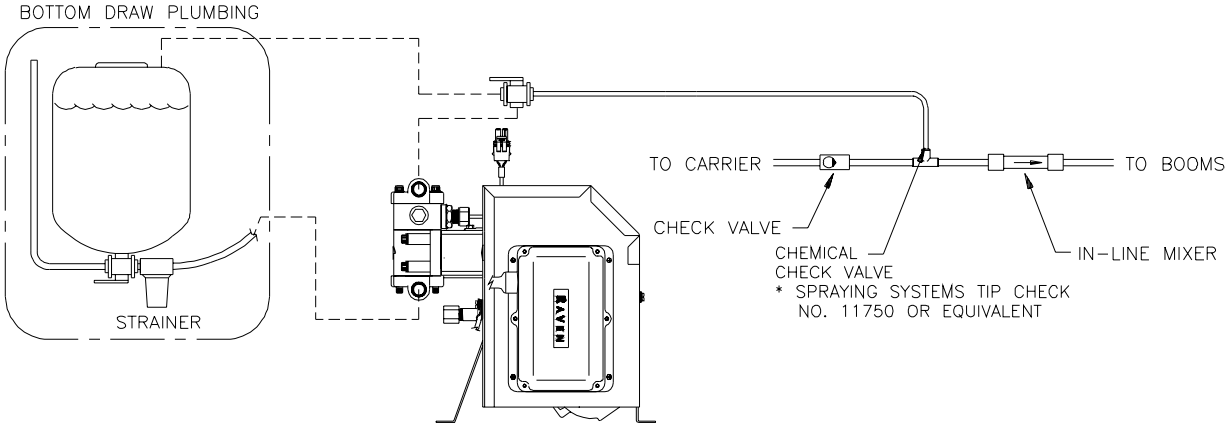

FIGURE 20

1) Plumb the Pressure Relief Valve (PRV), Flow Meter, Control Valve, Carrier Check Valve, Product Check Valve, and In-Line Mixer just ahead of the Boom On/Off Valves as shown in Figure 4.

2) Mount Injection Module close to the Boom On/Off Valves to minimize amount of product in tubing.

3) Plumb three way valve on output line of Injection Module (See Figure 20). Plumb recirculation line from three way valve to Product supply tank using 3/8 inch [10mm] tubing. Plumb injection line from three way valve to product check valve using 3/8 inch [10 mm] tubing (For low volume modules) or 1/2 inch [13 mm] tubing (for high volume modules). Product Check Valve and tubing not furnished.

4) Plumb inlet hose from product tank as shown in Figure 21.

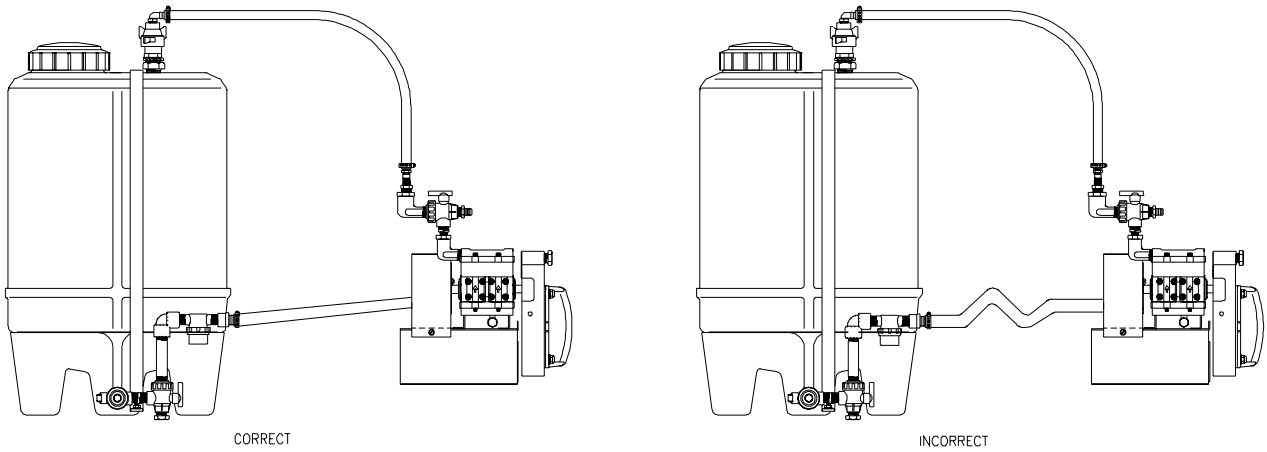

IMPORTANT:	Inlet hose must have gradual upward slope to pump inlet fitting with no dips or sags.

FIGURE 21

5) See "ADJUSTING PUMP SETTING".

6) See "MOUNTING THE CONSOLE AND CABLING" for installation of Control Console.

APPENDIX 8
TANK INJECTION MODULE INSTALLATION

1. PLUMBING THE INJECTION MODULE

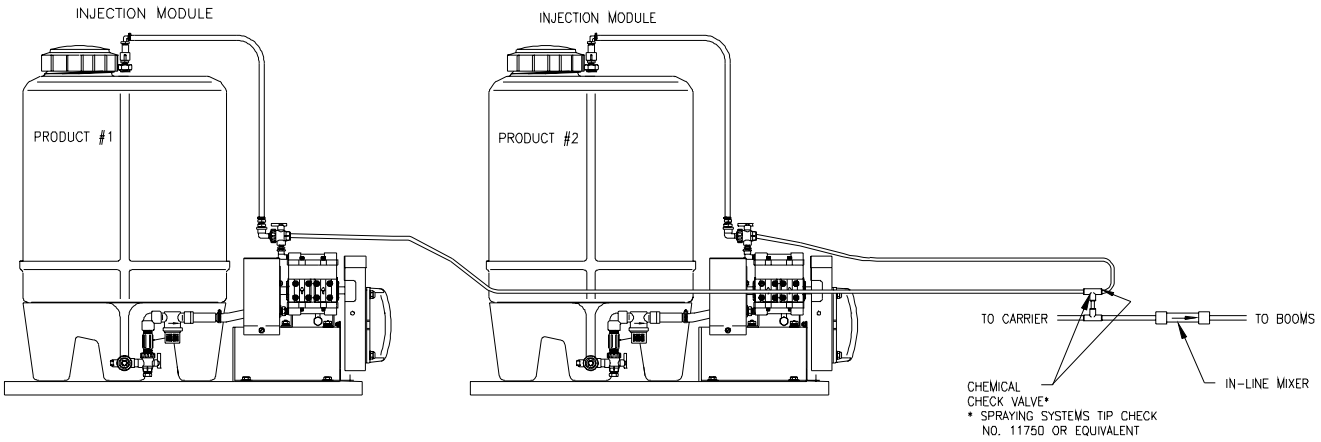

FIGURE 23

1) Plumb Pressure Relief Valve (PRV), Flow Meter, Control Valve, Carrier Check Valve, Product Check Valves, and In-line Mixer just ahead of the Boom On/Off Valves as shown in Figure 4.

2) Mount Injection Modules close to the Boom On/Off Valves to minimize amount of product in tubing.

3) Plumb output lines of Injection Modules to Product Check Valves (See Figure 23). Use 3/8 inch [10 mm] tubing on low volume modules and 1/2 inch [13 mm] tubing on high volume modules. Product Check Valves and tubing not furnished.

2. MOUNTING THE INJECTION MODULE

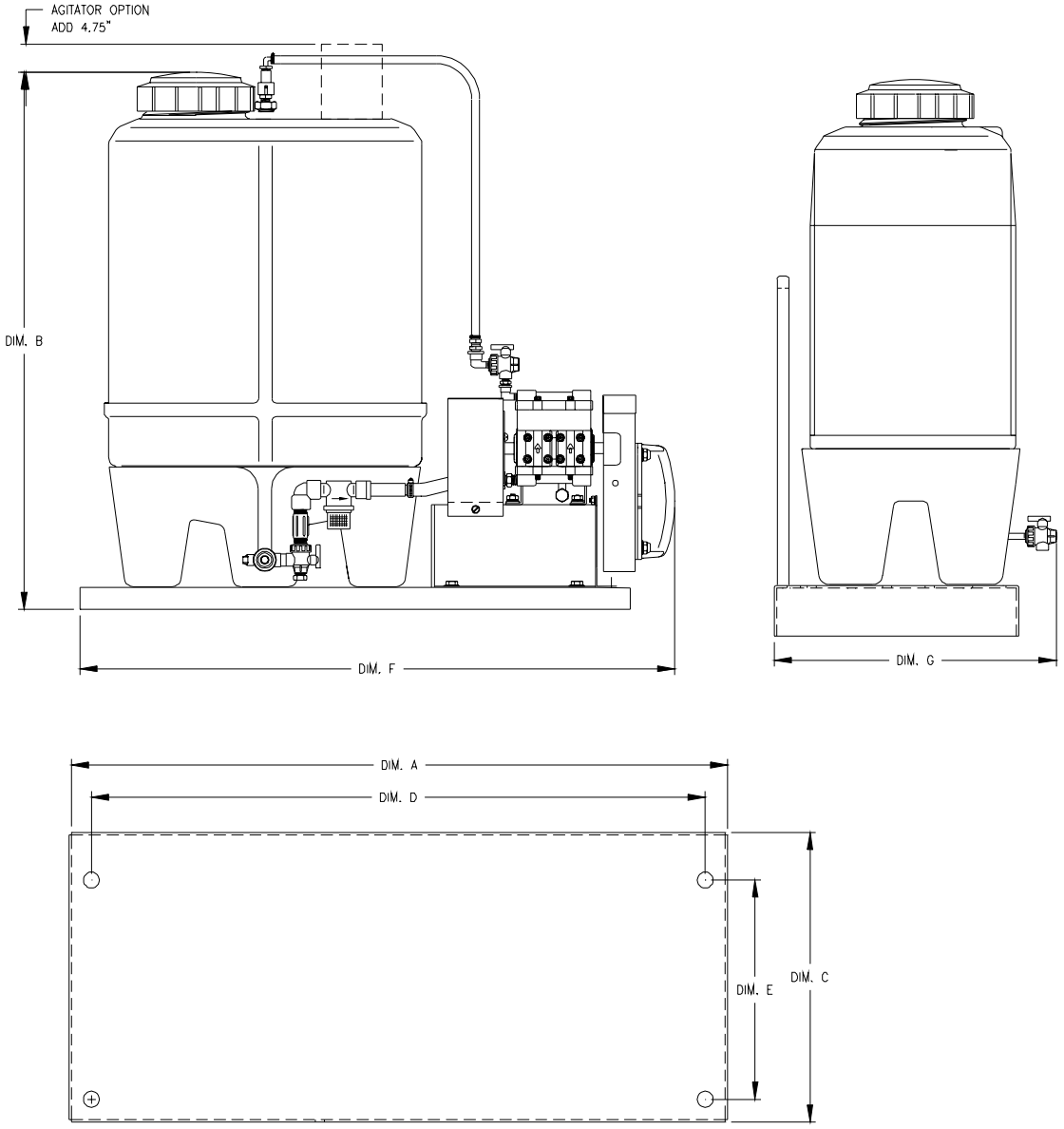

INJ. MODULE	UNITS	DIM A	DIM B	DIM C	DIM D	DIM E	DIM F	DIM G
16 GALLON	IN	29.68	33	12.15	27.78	10.25	32	17
	CM	75.4	83.8	30.8	70.6	26	81.3	43.2
24 GALLON	IN	29.68	41.5	12.15	27.78	10.25	32	17
	CM	75.4	105.4	30.8	70.6	26	81.3	43.2

FIGURE 24

1) Mount injection module using bolts in four corners. Reinforce vertical supports with external braces (steel angle iron or tubing) that are secured to structure of mobile sprayer. **OPERATION OF SYSTEM WITHOUT EXTERNAL BRACES MAY CAUSE FAILURE OF TANK SUPPORTS.**

2) See "INITIAL INJECTION SET-UP" before operating system.

APPENDIX 9
INJECTION MODULE MOUNTING INSTRUCTIONS

1. TYPICAL MODULE DIAGRAM

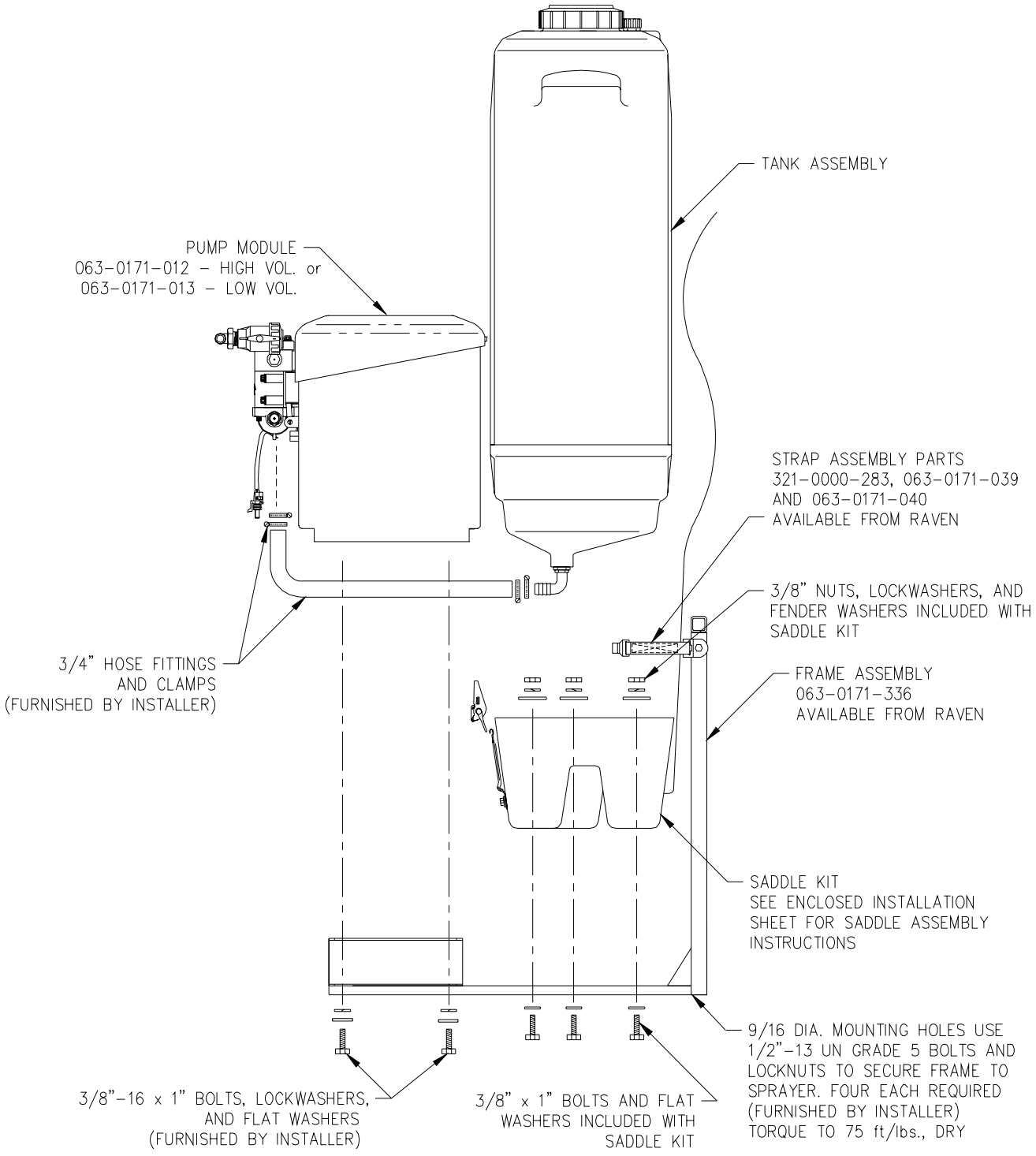

2. MODULE ASSEMBLY INSTRUCTIONS

1) Install the straps onto tank saddle per instructions enclosed in saddle kit, and secure saddle to frame (See "TYPICAL MODULE DIAGRAM").

2) Connect hose to elbow on bottom of tank, and secure with two hose clamps. Position clamps opposite to each other for best seal. Place tank in saddle and secure with straps.

3) Install over center buckle on the large strap by inserting webbing thru the metal loop, back thru upper slot. thru the lower slot, and back thru the metal loop as shown in Detail A.

4) Secure with buckle and safety pin on small strap (See Detail B).

5) Mount pump module to frame using the 3/8" x 1" bolts, lockwashers, and flat washers.

6) Connect hose from tank to hose barb on pump and secure with two hose clamps. Position hose clamps opposite each other for best seal.

If Strap Assembly parts are desired:

7) Attach the large strap onto right side of the frame using 7/16" x 1 3/4" bolt, lockwasher, and nut.

8) Attach the small strap on the left side of the frame using a 7/16" x 1 3/4" bolt, lockwasher, and nut as shown in Detail C.

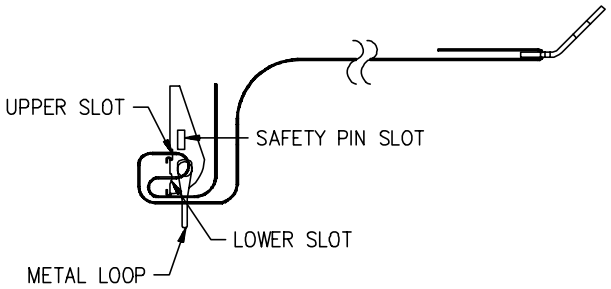

DETAIL A

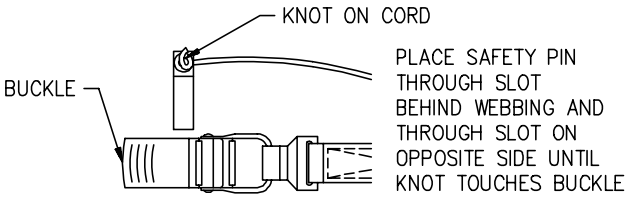

DETAIL B

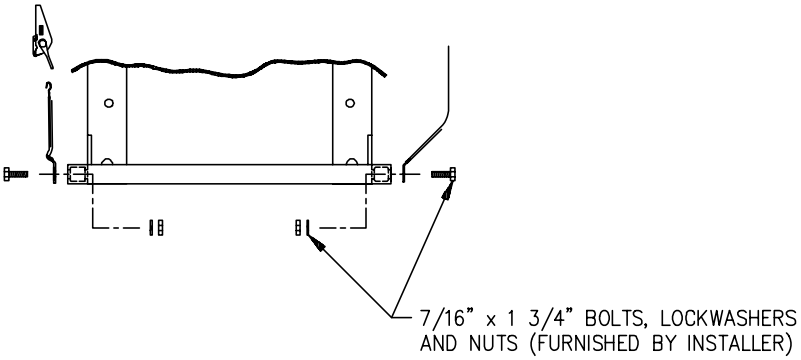

DETAIL C

APPENDIX 10
FLOW METER MAINTENANCE AND ADJUSTMENT PROCEDURE

1) Remove Flow Meter from sprayer and flush with clean water to remove any chemicals.

NH_3 WARNING:	Thoroughly bleed nurse tank hose and all other system lines prior to disassembling the Flow Meter, fittings, and hoses.

2) Remove flange bolts or clamp from the Flow Meter.

3) Remove the turbine hub and turbine from inside Flow Meter.

4) Clean turbine and turbine hub of metal filings or any other foreign material, such as wettable powders. Confirm that the turbine blades are not worn. Hold turbine and turbine hub in your hand and spin turbine. The turbine should spin freely with very little drag inside the turbine hub.

5) If transducer assembly is replaced or if turbine stud is adjusted or replaced, verify the turbine fit before reassembling. Hold turbine hub with turbine on transducer. Spin turbine by blowing on it. Tighten turbine stub until turbine stalls. Loosen turbine stud 1/3 turn. The turbine should spin freely.

6) Re-assemble Flow Meter.

7) Using a low pressure (5 psi) [34.5 kPa] jet of air, verify the turbine spins freely. If there is drag, loosen hex stud on the bottom of turbine hub 1/16 turn until the turbine spins freely.

8) If the turbine spins freely and cables have been checked per Appendix "PROCEDURE TO TEST FLOW CABLES", but Flow Meter still is not totalizing properly, replace Flow Meter transducer.

APPENDIX 11
PROCEDURE TO RE-CALIBRATE PUMP

1) Enter 50 into the METER 2 CAL key on the Console.

2) Place 3-way valve handle on Injection Pump for PROD 2 to recirculate position. (See Figure 9C).

3) Place BOOM and MASTER switches ON. Place the OFF/MAN/AUTO switch for PROD 2 to MAN.

4) Run pump until liquid appears from tank return hose. Place OFF/MAN/AUTO switch to OFF.

5) Enter "0" into PROD 2 VOLUME key (or for product under test).

6) Place tank return hose into measuring container.

7) Place OFF/MAN/AUTO switch to MAN until 50 ounces of measured product is pumped. The number displayed in PROD 2 VOLUME is the new METER 2 CAL.

8) Enter this new METER CAL number in METER 2 CAL key.

9) Enter "0" in PROD 2 VOLUME key.

10) Place OFF/MAN/AUTO switch to MAN until 50 ounces of measured product is pumped.

11) The number in PROD 2 VOLUME should be 49, 50, or 51. If not, repeat calibration procedures.

12) Empty tank return hose into measuring container.

13) Pour product caught in measuring container back into Injection Module Tank.

CALIBRATION FLASK
106–0159–454

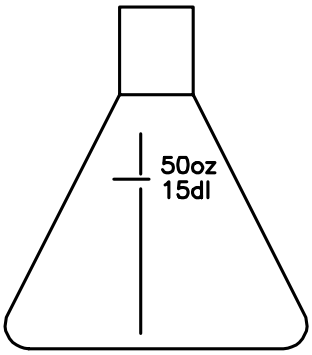

APPENDIX 12
REMOTE SWITCH OPTION

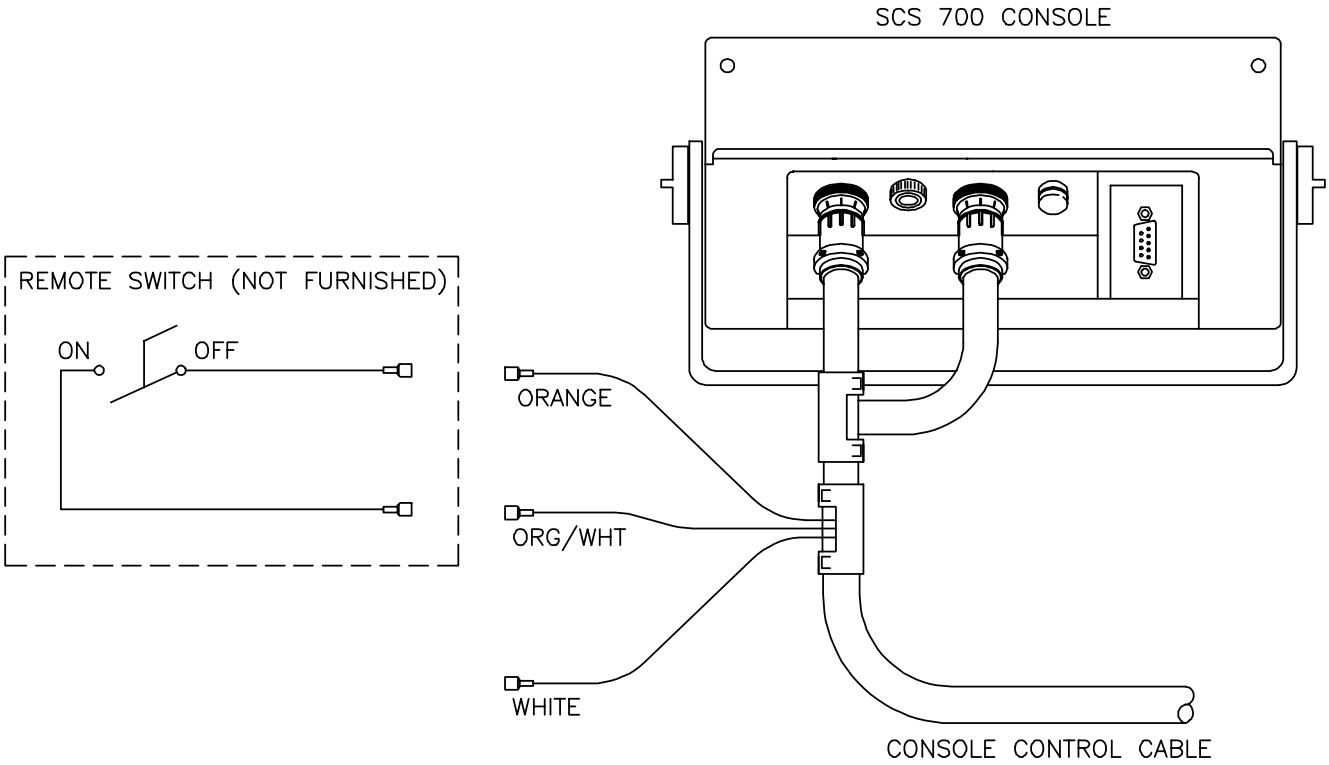

The REMOTE switch when installed is in parallel with the MASTER switch; therefore switching on the REMOTE switch or the MASTER switch will energize the Boom Valves.

APPENDIX 13
BOOM CAL DATA ENTRY FOR
SCS 710 6 BOOM CONSOLE

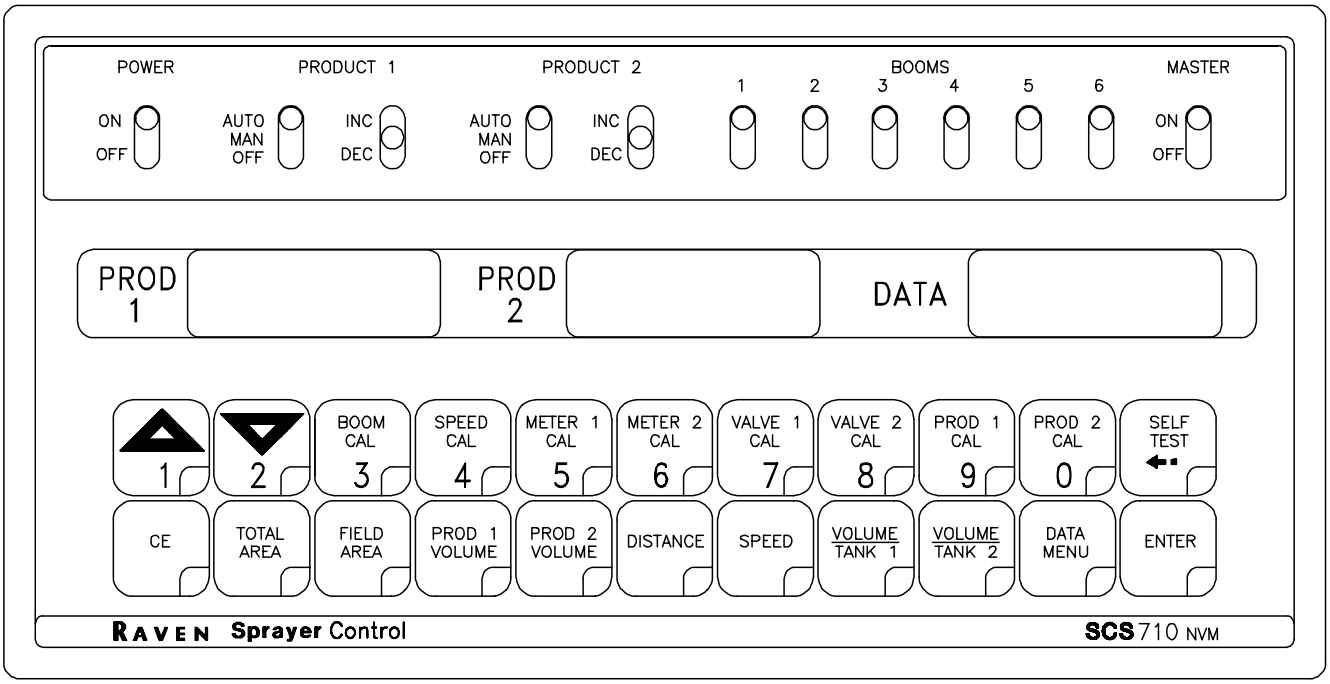

DEFINITION OF KEYS

Depressing this key displays selected boom number in PROD 2 display. **EXAMPLE:** Boom 1 will display as b-01.

Depressing this key after selecting BOOM CAL increments the boom number. **EXAMPLE:** b-01 will increment to b-02.

Depressing this key after selecting BOOM CAL decrements the boom number. **EXAMPLE:** b-02 will decrement to b-01.

ENTERING DATA

1) Select desired boom number.

2) Enter boom length as detailed in "CALCULATING BOOM CAL".

APPENDIX 14
SCS 710 6 BOOM CONSOLE WIRING DIAGRAM

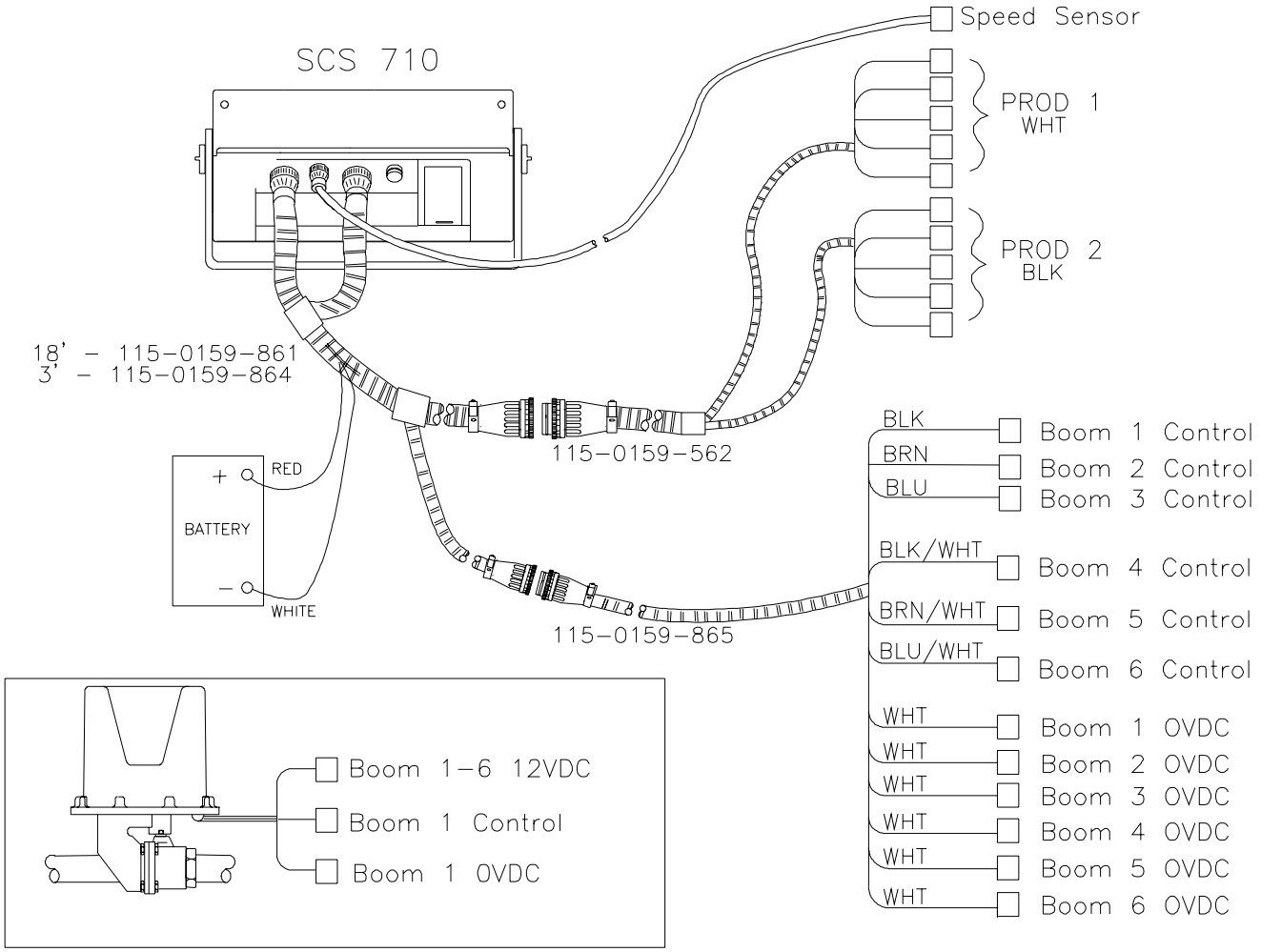

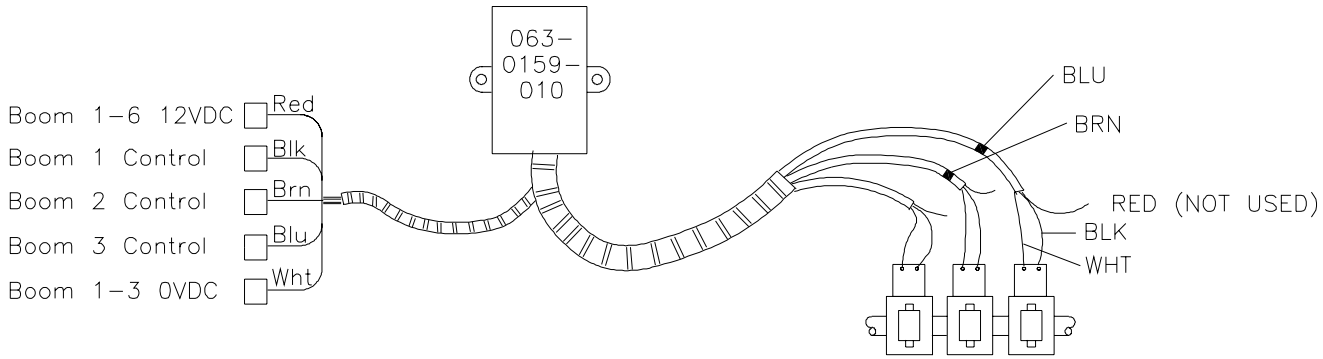

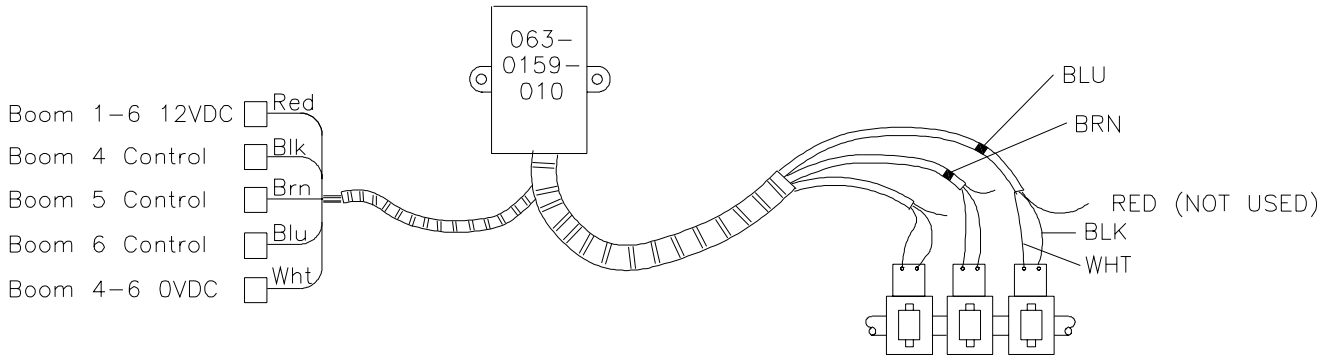

APPENDIX 15
SERIAL INTERFACE

1) Cable pinout (P/N 115-0159-624), supplied with Thermal Printer Kit (P/N 117-0159-529).

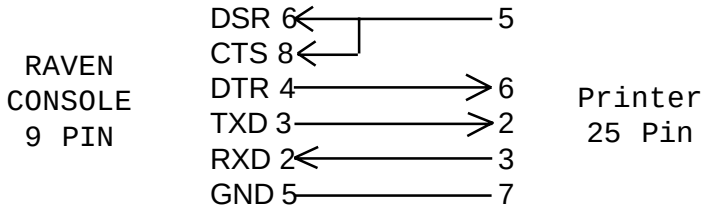

2) Changing PROD 1 CAL and PROD 2 CAL by remote computer.

a) Configuration of RS-232C serial port:

1200 or 9600 Baud Rate
NO Parity
8 Data Bits
2 Stop Bits

b) Data stream to Raven Console.

EXAMPLE: Change PROD 1 to 123.4 and PROD 2 to 6.5

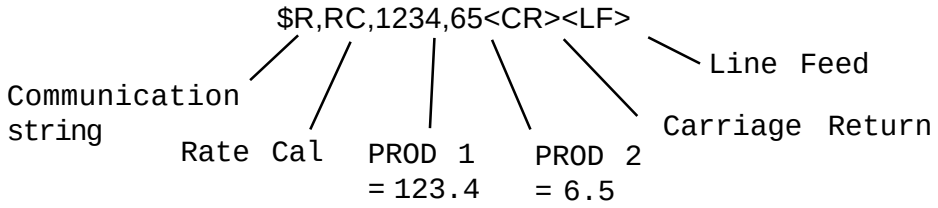

Decimal point is not sent from Remote Computer to Raven Console.

3) Optional 9 pin to 9 pin cable pinout (P/N 115-0159-822).

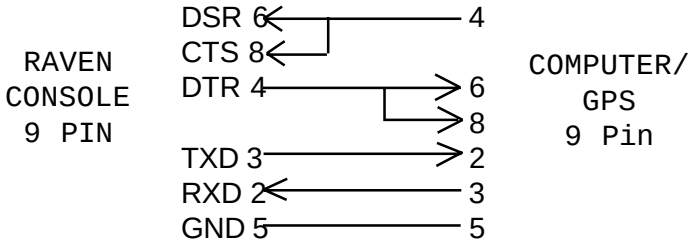

APPENDIX 16
SCS 700/710 COMMUNICATION STRINGS

REMOTE COMPUTER TO SCS 700/710 CONSOLE

All request strings begin with $R, to indicate a Raven communication string.

Rate Change Request:

To set Prod Cal values for both products:

$R,RC,<prod_1_cal>,<prod_2_cal><CR><LF>

To set Prod Cal value for product 2 only:

$R,RC,,<prod_2_cal><CR><LF>

Calibration String Values Request:

$R,CR<CR><LF>

Data String Request:

$R,DR<CR><LF>

SCS 700/710 CONSOLE TO REMOTE COMPUTER

All console output strings begin with $R047F, the $R indicates a Raven communication string, the 047 is the last three digits of the current SCS 700/710 programmed chip part number and F is the software revision number.

Calibration Strings:

$R047F,C1,<switch_byte_1>,<switch_byte_2>,
<boom_1_cal>,<boom_2_cal>,<boom_3_cal>,<boom_4_cal>*,
<boom_5_cal>*,<boom_6_cal>*,<speed_cal> <CR><LF>

$R047F,C2,<meter_1_cal>,<meter_2_cal><CR><LF>

$R047F,C3,<valve_1_cal>,<valve_2_cal>,<prod_1_cal>,
<prod_2_cal><CR><LF>

Bit	Switch Byte 1	Switch Byte 2
0	boom 1	0
1	boom 2	0
2	boom 3	0
3	boom 4*	prod 1 auto
4	boom 5*	prod 1 manual
5	boom 6*	prod 2 auto
6	0	prod 2 manual
7	1	1

* Booms 4, 5, and 6 are only in the SCS 710 Console strings.

NOTE: If prod auto and manual are both zero, the product is in Off.
For switch Byte Bits; 0 = off and 1 = on.

Data Strings:

$R047F,D1,<total_area>,<field_area><CR><LF>

$R047F,D2,<prod_1_volume>,<prod_ 2_volume><CR><LF>

$R047F,D3,<tank_1_volume>,<tank_2_volume>,<feet/meters><CR><LF>

Actual Rate:

$R047F,AR,<actual_rate_1>,<actual_rate_2><CR><LF>

Time/Date:

$R047F,TD,<hr:min>,<month/day/year>,<field_reference><CR><LF>

APPENDIX 17
SCS 700/710 DATA MENU KEY FEATURES

The SCS 700/710 has multiple features that are located under the DATA MENU key. These features are accessed by using the DATA MENU key to toggle between main menu titles, and the UP and DOWN arrow keys to toggle between the sub menu titles. The current settings for these features are shown in the DATA display window. For further explanation on these features see the DATA MENU section of the manual.

MAIN MENU TITLE	**SUB MENU TITLE**	**SETTINGS**
PROD 1 display	PROD 2 display	DATA display
SERIAL PORT MENUS		
SPr	Prn	BEGn / End
	FrEF	0
	bAUd	1200 / 9600
	rAtE	on / off
	triG	0
	Unit	Ft / SEC
	dLoG	on / off
GLOBAL POSITIONING SYSTEM MENUS		
GPS	FiLE	0
	SySE	inAC
	Grid	0
	LAt	0
	Lon	0
	NodE	C / A / n / nc
TIME AND DATE MENUS		
dAtE	tiNE	0:00
	onth	0
	dAY	0
	YEAr	0
	P dn	10
FLOW RATE MENUS		
Fr	FLo1	0
	FLo2	0
	LL 1	0
	LL 2	0
ALARM MENUS		
ALr	ALrN	on / off
	uF 1	on / off
	uF 2	on / off
	FE 1	on / off
	FE 2	on / off
MISCELLANEOUS MENUS		
NiSC	diSP	on / off
	AG 1	on / off
	AG 2	on / off
	APh	0

SCS 700 REPLACEMENT PARTS

ITEM	DESCRIPTION	RAVEN PART#
1	MASTER Switch	412-2011-046
2	BOOM Switch	412-2011-047
3	MAN ADJ Switch	412-2011-049
4	AUTO/ MAN/ OFF Switch	412-2011-050
5	Power Switch	412-2011-048
6	Mounting Bracket	106-0159-437
7	Mounting Knob	106-0159-438
8	Fuse Holder	510-2001-018
9	Fuse, 15 Amp	510-1003-003
10	Console Control Cable (18 ft.)	115-0159-861
	Console Control Cable (3 ft.)	115-0159-864
11	Product Cable (21 ft.)	115-0159-562
12	Assorted Terminal Kit	117-0159-402
13	Switch Cover	063-0159-606
14	1-Set Filler Spacers	117-0159-421
15	Face Plate Assembly	063-0159-611
16	Display Board Spacer	107-0159-478
17	LCD Display Board	064-0159-454
18	Processor Board (Ser. Interface)	064-0159-604
19	Connector Plate Assembly (Ser. Interface)	063-0171-346
20	Back Assembly	063-0159-530
21	Boom Cable (21 ft.)	115-0159-862
22	Product Ext. Cable (12 ft.)	115-0159-612
	Product Ext. Cable (24 ft.)	115-0159-613
23	Boom Ext. Cable (12 ft.)	115-0159-614
	Boom Ext. Cable (24 ft.)	115-0159-615
24	Thermal Printer Kit (Ser. Interface)[not shown]	117-0159-529
25	RS232 Computer Cable (Ser. Interface)[not shown]	115-0159-822
26	SCS 700 Console	063-0171-344

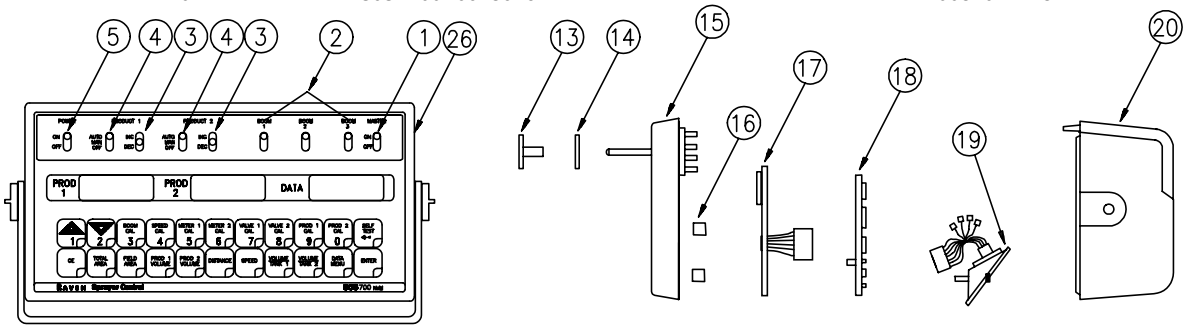

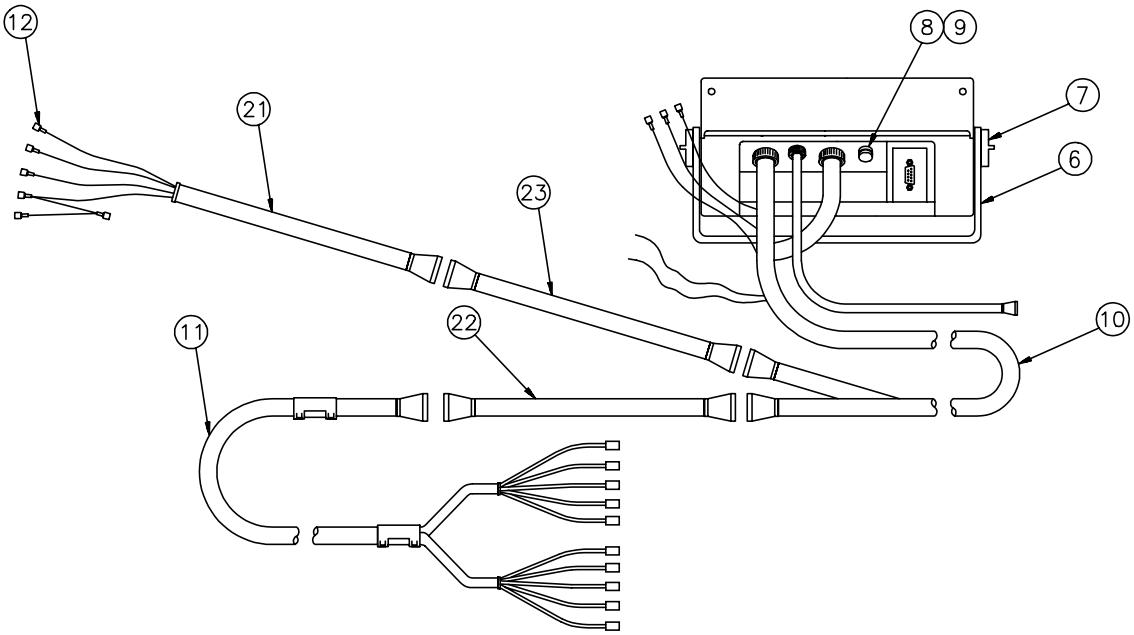

RAVEN

RAVEN INDUSTRIES

Limited Warranty

What Does this Warranty Cover?

This warranty covers all defects in workmanship or materials in your Raven Applied Technology Product under normal use, maintenance, and service.

How Long is the Coverage Period?

Raven Applied Technology Products are covered by this warranty for 12 months after the date of purchase. This warranty coverage applies only to the original owner and is nontransferable.

How Can I Get Service?

Bring the defective part and proof of purchase to your Raven Dealer. If your Dealer agrees with the warranty claim, the Dealer will send the part and proof of purchase to their distributor or to Raven Industries for final approval.

What Will Raven Industries Do?

Upon confirmation of the warranty claim, Raven Industries will, at our discretion, repair or replace the defective part and pay for return freight.

What is not Covered by this Warranty?

Raven Industries will not assume any expense or liability for repairs made outside our facilities without written consent. Raven Industries is not responsible for damage to any associated equipment or products and will not be liable for loss of profit or other special damages. The obligation of this warranty is in lieu of all other warranties, expressed or implied, and no person or organization is authorized to assume any liability for Raven Industries.

Damages caused by normal wear and tear, misuse, abuse, neglect, accident, or improper installation and maintenance are not covered by this warranty.

SCS 700
Installation & Service Manual
(P/N 016-0159-419 Rev S 2/09)

RAVEN

Simply improving your position.℠

Raven Industries
Applied Technology Division
P.O. Box 5107
Sioux Falls, SD 57117-5107

Toll Free (U.S. and Canada): (800)-243-5435
or Outside the U.S. :1 605-575-0722
Fax: 605-331-0426
www.ravenprecision.com
atdinfo@ravenind.com