Fendt Vario 700, 800, and 900 Series SmarTrax™ MD Installation Manual

P/N 016-5030-043 Rev A 09/15 E22761

Copyright 2014, 2015

Disclaimer

While every effort has been made to ensure the accuracy of this document, Raven Industries assumes no responsibility for omissions and errors. Nor is any liability assumed for damages resulting from the use of information contained herein.

Raven Industries shall not be responsible or liable for incidental or consequential damages or a loss of anticipated benefits or profits, work stoppage or loss, or impairment of data arising out of the use, or inability to use, this system or any of its components. Raven Industries shall not be held responsible for any modifications or repairs made outside our facilities, nor damages resulting from inadequate maintenance of this system.

As with all wireless and satellite signals, several factors may affect the availability and accuracy of wireless and satellite navigation and correction services (e.g. GPS, GNSS, SBAS, etc.). Therefore, Raven Industries cannot guarantee the accuracy, integrity, continuity, or availability of these services and cannot guarantee the ability to use Raven systems, or products used as components of systems, which rely upon the reception of these signals or availability of these services. Raven Industries accepts no responsibility for the use of any of these signals or services for other than the stated purpose.

©Raven Industries, Inc. 2014

Chapter 1 *Important Safety Information* 1

Electrical Safety 2

Chapter 2 *Introduction* 3

Preparing for Installation 4
- Recommendations 4
- Point of Reference 4

Updates 4

Kit Contents 5

Chapter 3 *Mechanical Drive Installation* 9

Remove the Steering Wheel 9

Install the Anti-Rotation Bracket 11

Install the Spline and Ring Gear Assemblies 13

Reinstall the Steering Wheel 14

Install the Mechanical Drive 15

Chapter 4 *Node and Wiring Installation* 19

Install the SmarTrax MD Node 19
- Node Mounting Locations 19
- Mount the SmarTrax MD Node 20

Install the Foot Switch 21

Install the Node Harness 22

Install the Chassis Cable - SmarTrax MD-Only Systems (If Applicable) 23

Connect SmarTrax MD to an Existing Chassis Cable (If Applicable) 24

CHAPTER 1

Important Safety Information

NOTICE

Read this manual and the operation and safety instructions included with your implement and/or controller carefully before installing the SmarTrax™ MD system.

- Follow all safety information presented within this manual.
- If you require assistance with any portion of the installation or service of your Raven equipment, contact your local Raven dealer for support.
- Follow all safety labels affixed to the SmarTrax MD system components. Be sure to keep safety labels in good condition and replace any missing or damaged labels. To obtain replacements for missing or damaged safety labels, contact your local Raven dealer.

When operating the machine after installing SmarTrax MD, observe the following safety measures:

- Be alert and aware of surroundings.
- Do not operate SmarTrax MD or any agricultural equipment while under the influence of alcohol or an illegal substance.
- Remain in the operator's position in the machine at all times when SmarTrax MD is engaged.
- Disable SmarTrax MD when exiting the operator's seat and machine.
- Do not drive the machine with SmarTrax MD enabled on any public road.
- Determine and remain a safe working distance from other individuals. The operator is responsible for disabling SmarTrax MD when the safe working distance has diminished.
- Ensure SmarTrax MD is disabled prior to starting any maintenance work on SmarTrax MD or the machine.

⚠ WARNING

- The machine must remain stationary and switched off during SmarTrax MD installation or maintenance.

⚠ CAUTION

Electrical Safety

- Always verify that the power leads are connected to the correct polarity as marked. Reversing the power leads could cause severe damage to the equipment.
- Ensure that the power cable is the last cable to be connected.

CHAPTER 2

Introduction

Congratulations on your purchase of the SmarTrax™ MD system!

SmarTrax MD-assisted steering takes the stress out of driving and makes it quick and easy for you to improve your operating efficiency and performance. SmarTrax MD is compatible with Cruizer II™ and Cruizer II™ RTK, Envizio Pro™, Envizio Pro®, Envizio Pro XL™, and Viper Pro™ systems.

The following instructions are designed to assist with the proper installation of the SmarTrax MD system. Refer to the SmarTrax MD Calibration & Operation Manual (P/N 016-5030-020) for assistance with calibrating the software and using the SmarTrax MD system.

This manual applies to the following machines:

MAKE: Fendt
MODEL: Vario 700 Series - 712, 714, 716, 718, 720, 722, and 724
Vario 800 Series - 818, 820, 822, 824, 826, and 828
Vario 900 Series - 924, 927, 930, 933, 936, and 939

FIGURE 1. **Fendt Vario 828**

Preparing for Installation

Before installing the SmarTrax MD system, park the machine where the ground is level, clean, and dry. Turn off the machine and leave it turned off for the duration of the installation process.

During the installation process, follow good safety practices. Be sure to carefully read the instructions in this manual as you complete the installation process.

Recommendations

Raven Industries recommends the following best practices when installing or operating the SmarTrax MD system for the first time, at the start of the season, or when moving the SmarTrax MD system to another machine:

- Use part numbers to identify the parts.
- Do not remove the plastic wrap from a part until it is necessary for installation.
- Do not remove plastic caps from a part until it is necessary for installation.

Point of Reference

The instructions in this manual assume that you are standing behind the machine, looking toward the cab.

Updates

Software and manual updates are available on the Raven Applied Technology website:

http://www.ravenhelp.com

At Raven Industries, we strive to make your experience with our products as rewarding as possible. One way to improve this experience is to provide us with feedback on this manual.

Your feedback will help shape the future of our product documentation and the overall service we provide. We appreciate the opportunity to see ourselves as our customers see us and are eager to gather ideas on how we have been helping or how we can do better.

To serve you best, please send an email with the following information to

techwriting@ravenind.com

-Fendt Vario 700, 800, and 900 Series SmarTrax™ MD Installation Manual
-Manual No. 016-5030-043 Rev. A
-Any comments or feedback (include chapter or page numbers if applicable).
-Let us know how long have you been using this or other Raven products.

We will not share your email or any information you provide with anyone else. Your feedback is valued and extremely important to us.

Thank you for your time.

Kit Contents

This section contains a list of the components that are included in the SmarTrax MD kit. Before beginning the system installation, compare the items in the kit with the components on this list. If you have questions about the kit, contact your Raven dealer.

TABLE 1. SmarTrax MD Installation Kit (P/N 117-5030-043)

Picture	Item Description	Part Number	Qty.
Not Pictured	Manual - Fendt 700, 800, and 900 Series SmarTrax MD Installation	016-5030-043	1
	Assembly - Ring Gear	063-4001-011	1
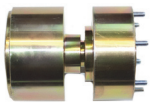	Assembly - Spline Adapter	063-4001-022	1
	Trim - Ring Gear Protective	019-0159-590	1
	Bracket - Node Mounting	107-0172-084	1
	Bracket - Angle Mounting	107-0172-270	1
	Bracket - Collar Weldment	116-0159-751	1
	Bearing - 1/2” Plastic Flanged	325-0000-036	1
	Screw - #10-16 x 3/4” Zinc Self-Tapping	310-1002-073	4

TABLE 1. SmarTrax MD Installation Kit (P/N 117-5030-043)

Picture	Item Description	Part Number	Qty.
	Bolt - #10-24 x 3/4” UNC Zinc Carriage	311-0069-082	2
	Bolt - 5/16”-18 x 3/4” Grade 2 Carriage	311-0069-111	2
	Nut - 3/8”-16 Zinc Flanged Lock	312-1001-167	3
	Nut - 5/16”-18 Zinc Flanged Lock	312-1001-184	2
	Nut - #10-24 Wing	312-3000-013	2
	Washer - 0.265” ID x 0.505” OD x 0.060” Thick	313-2300-120	4
	Tape - 3” Double-Sided	332-0000-019	6

TABLE 2. SmarTrax MD Controller Kit (P/N 117-5030-020)

Picture	Item Description	Part Number	Qty.
Not Pictured	Manual - SmarTrax MD Calibration & Operation	016-5030-020	1
Not Pictured	Sheet - Field Computer Minimum Software Installation	016-5030-023	1
	Assembly - SmarTrax MD Mechanical Drive Unit	063-4001-010	1

TABLE 2. SmarTrax MD Controller Kit (P/N 117-5030-020)

Picture	Item Description	Part Number	Qty.
	Node - SmarTrax MD	063-4001-013	1
	Pin - Anti-Rotation	107-4001-004	1
	Cable - SmarTrax MD Node Harness	115-4001-157	1
	Switch - Foot	063-0173-593	1
	Drive - USB Flash	063-4001-020	1

CHAPTER 3

Mechanical Drive Installation

FIGURE 1. **Spline Assembly Disassembled**

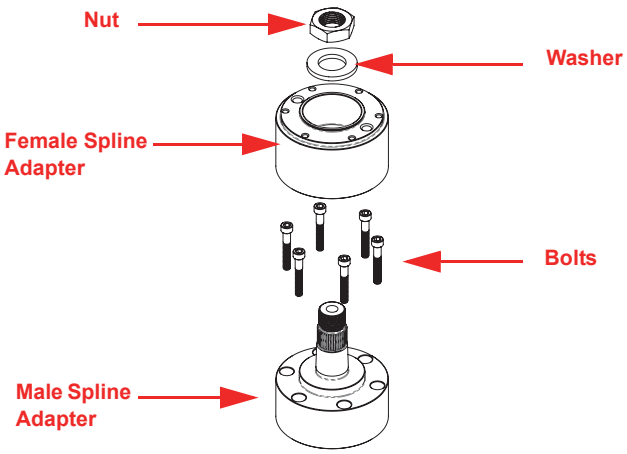

1. Locate the 20 mm x 36 tooth spline adapter assembly (P/N 063-4001-022).
2. Disassemble the spine adapter assembly as shown in Figure 1 above.

Remove the Steering Wheel

Note: *The steps in this section require use of a steering wheel puller (not supplied). For questions on the proper procedure for removing the steering wheel, contact your local equipment dealer.*

FIGURE 2. **Steering Wheel Cap**

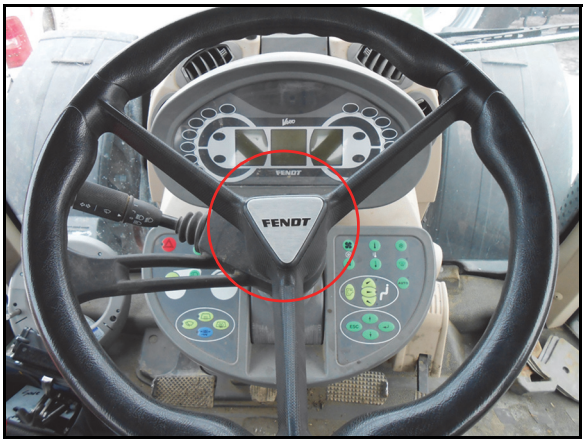

1. Remove the cap from the center of the steering wheel.

FIGURE 3. **Machine's Steering Wheel Nut**

2. Remove the nut used to secure the steering wheel to the steering column.

FIGURE 4. **Steering Wheel Removed**

3. Using the steering wheel puller, remove the steering wheel from the steering column.

Install the Anti-Rotation Bracket

FIGURE 5. **Steering Column Cover**

1. Remove the control arm cover.

Note: *Keep the control arm cover for future use.*

FIGURE 6. **Bolt Removal**

2. Remove the bolts used to secure the control clamp to the steering column.
3. Remove the control clamp.

Note: *Keep the control clamp for future use.*

FIGURE 7. **Anti-Rotation Bracket Installed**

4. Clamp the collar weldment bracket (P/N 116-0159-751) around the steering column and secure it using the machine's bolts that were removed in step 2.

FIGURE 8. **Flanged Bearing Installed on Bracket**

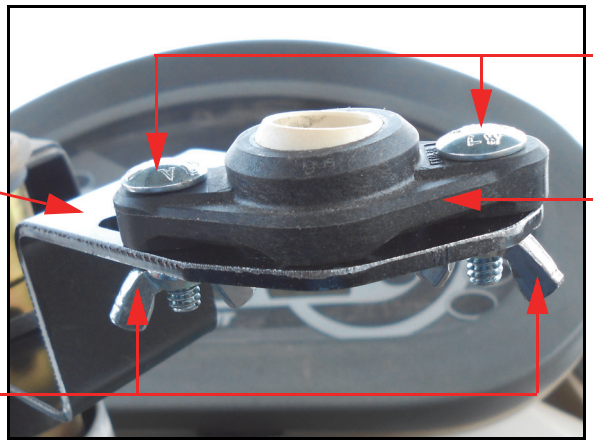

5. Install the 1/2" plastic flanged bearing (P/N 325-0000-036) on the end of the collar weldment bracket using two #10-24 x 3/4" carriage bolts (P/N 311-0069-082) and two #10-24 wing nuts (P/N 312-3000-013).

Install the Spline and Ring Gear Assemblies

FIGURE 9. Female Spline Adapter Installed on Steering Column

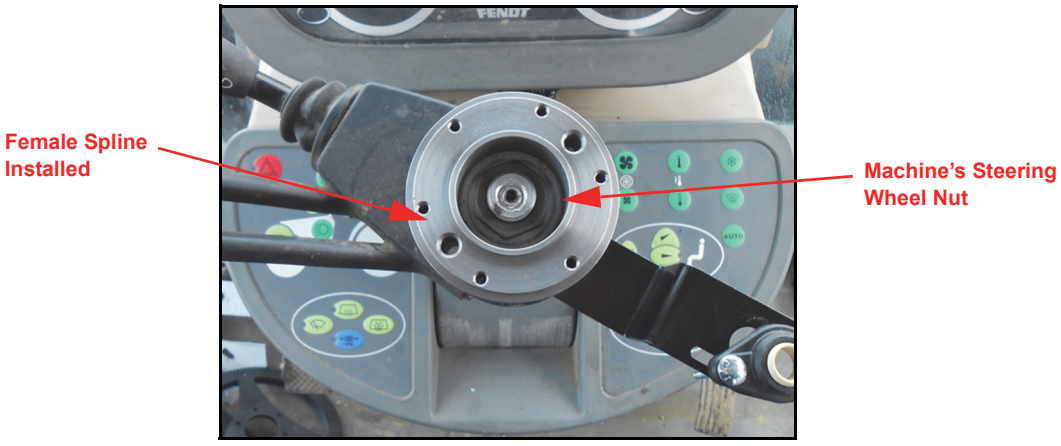

1. Install the female spline adapter on the machine's steering column stem.
2. Install the machine's steering wheel nut that was removed during the steering wheel removal.

FIGURE 10. Ring Gear Installed

3. Place the ring gear (P/N 063-4001-011) over the female spline adapter with the V-ring facing down and the holes in the ring gear aligned with the holes in the spline adapter.

FIGURE 11. **Male Spline Adapter Assembly Installed**

4. Align the bolt holes in the male spline adapter with the holes in the ring gear assembly.
5. Install and tighten the spline assembly bolts to secure the male spline adapter and ring gear to the female spline adapter.

Reinstall the Steering Wheel

FIGURE 12. **Steering Wheel Placement**

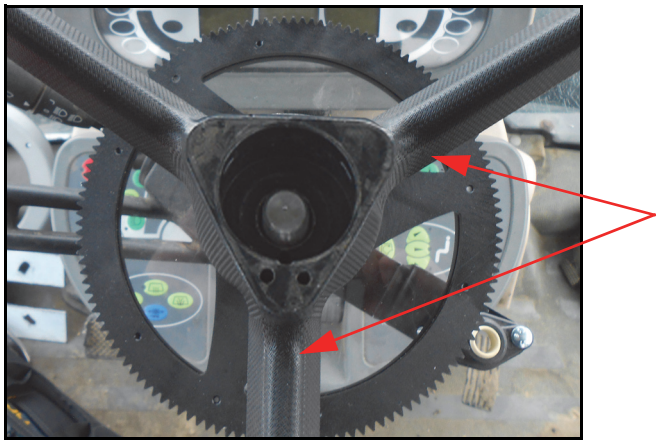

1. Align the spokes of the steering wheel with the spokes on the installed ring gear.

FIGURE 13. **Washer and Nut Installed**

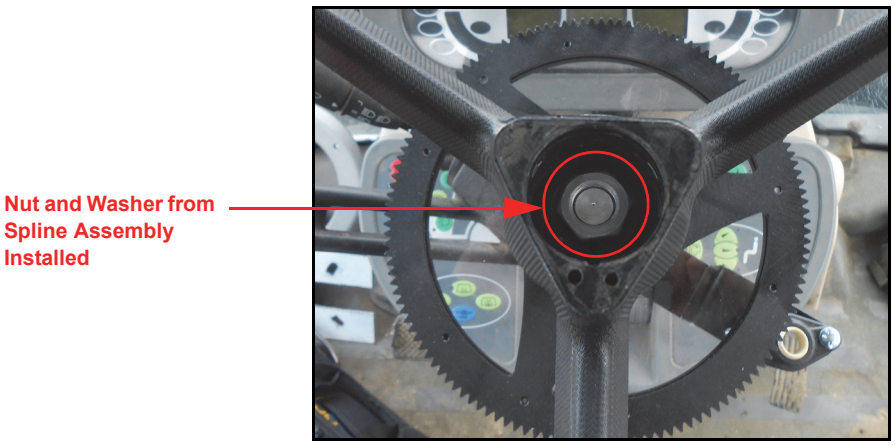

2. Install the steering wheel on the male spline adapter.
3. Reinstall the machine's nut on the protruding male spline adapter.

FIGURE 14. **Steering Wheel Cap Reinstalled**

4. Replace the steering wheel cap.

Install the Mechanical Drive

Note: *Depending on the machine's configuration, it may be necessary to install the anti-rotation pin in the mechanical drive's casing after the mechanical drive is installed instead of before as indicated in the instructions below.*

FIGURE 15. **Anti-Rotation Pin Installation Locations**

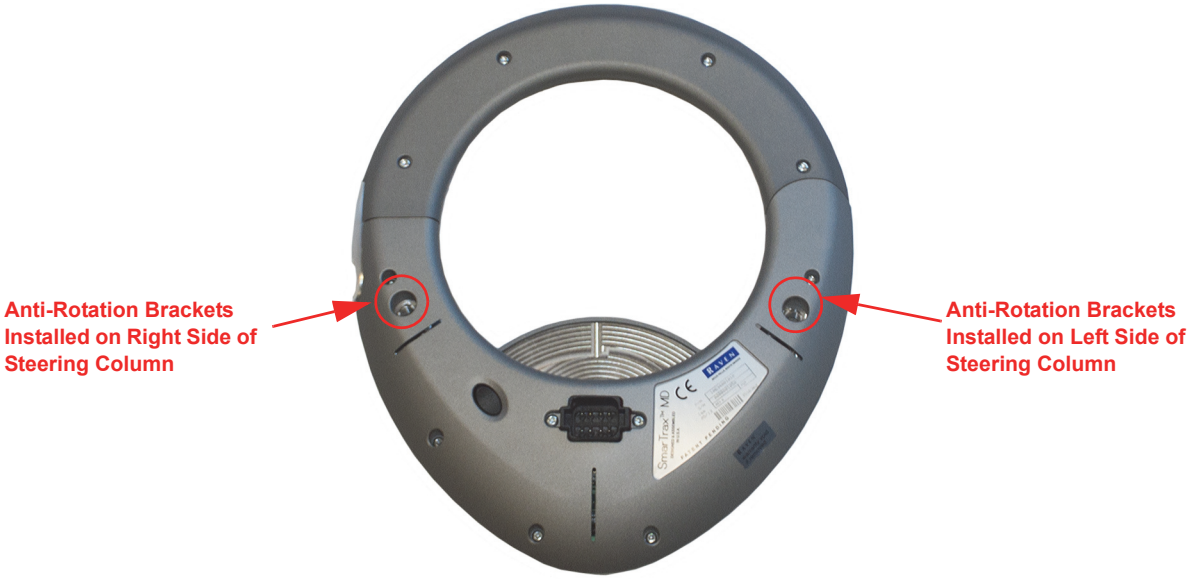

1. Determine the anti-rotation pin (P/N 107-4001-004) installation location on the mechanical drive (P/N 063-4001-010) based on the anti-rotation bracket installation location.
2. Screw the anti-rotation pin into the mechanical drive's casing.

FIGURE 16. **Anti-Rotation Pin Installed in Bracket Assembly**

3. Insert the anti-rotation pin into the installed flanged bearing (P/N 325-0000-036) on the anti-rotation bracket assembly.

FIGURE 17. **Mechanical Drive Installed**

4. Install the mechanical drive around the installed ring gear assembly, closing it firmly until the latch on the housing is securely locked.
5. Ensure the anti-rotation bracket assembly is installed securely.

CHAPTER 4

Node and Wiring Installation

Install the SmarTrax MD Node

Node Mounting Locations

FIGURE 1. **Node Mounting**

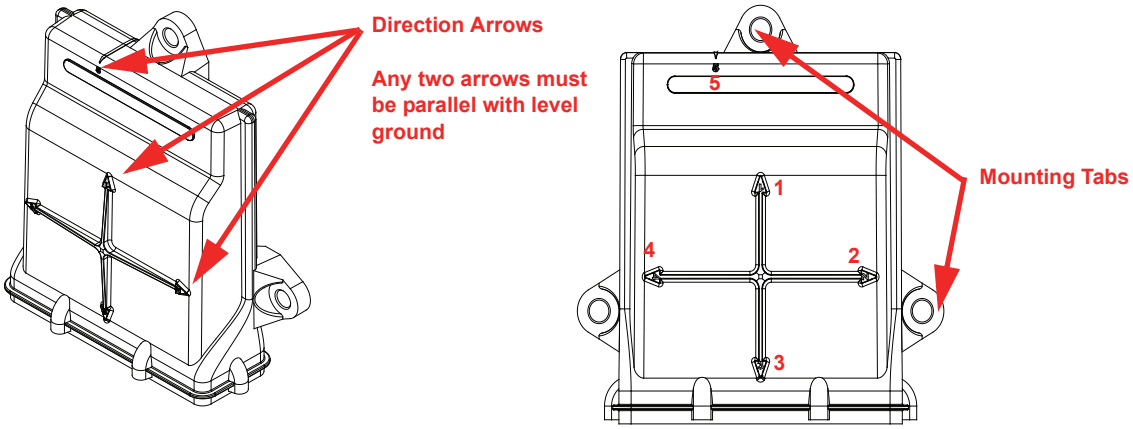

When choosing the location for the SmarTrax MD node, consider the following points:

- Mount the SmarTrax node inside the machine's cab on a flat, level surface for proper performance and cable connection.
- One of the six numbered direction arrows on the node must be oriented in the direction of forward vehicle travel, one arrow pointing straight up, and two of the arrows parallel to the ground.

Note: *Make a note of the number of the arrow that is oriented in the direction of forward vehicle travel. This number will be needed during the SmarTrax calibration process.*

- The node mounting location must not create tripping hazards.
- Mount the node in a location where it will not be kicked or jarred during normal equipment operation.
- The location must allow cable routing to avoid crimping or damaging the cables or the node connections.
- Securely fasten the node using bolts or screws through at least two of the three mounting holes. When mounted properly, the node should not become loose or rotate.

Mount the SmarTrax MD Node

Vario 700 & 800 Series Mounting

FIGURE 2. Node Mounting Bracket Assembled

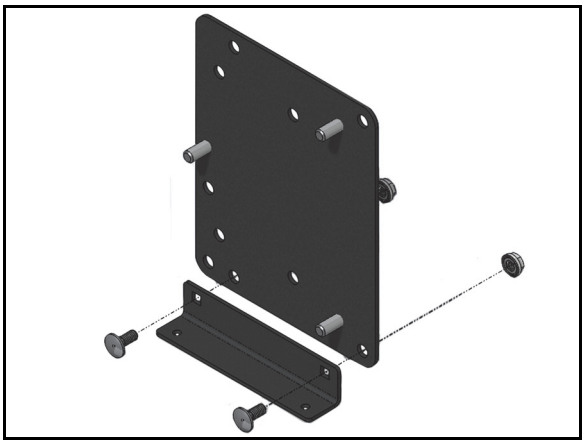

1. Secure the leg of the angle mounting bracket (P/N 107-0172-270) containing the square holes to the front of the node mounting bracket (P/N 107-0172-084) using two 5/16”-18 x 3/4” grade 2 carriage bolts (P/N 311-0069-111) and two 5/16”-18 zinc flanged lock nuts (P/N 312-1001-184).

FIGURE 3. Node Installed

Note: *The forward vehicle direction is 3 in the pictured node orientation.*

2. Place the node mounting bracket assembly against the cab wall next to the parking brake so that the angle mounting bracket is flush with the cab floor.
3. Secure the angle mounting bracket to the floor using two #10-16 x 3/4” self-tapping screws (P/N 310-1002-073).
4. Install the node (P/N 063-4001-013) on the mounting bracket assembly so that the node connectors point to the front of the machine.

5. Secure the node to the mounting bracket assembly using three 3/8”-16 flanged lock nuts (P/N 312-1001-167).

Vario 900 Series Mounting

FIGURE 4. Node Installed

Note: *The forward vehicle direction is 1 in the pictured node orientation.*

1. Place the node mounting bracket (P/N 107-0172-084) on the floor of the cab to the left of the operator’s seat, behind the parking brake.
2. Secure the bracket to the floor of the cab using four #10-16 x 3/4” self-tapping screws (P/N 310-1002-073) and four 0.265” ID x 0.505” OD x 0.060” thick washers (P/N 313-2300-120) or six strips of double-sided tape (P/N 332-0000-019).
3. Secure the node (P/N 063-4001-013) to the node mounting bracket using three 3/8”-16 zinc flanged lock nuts (P/N 312-1001-167).

Install the Foot Switch

FIGURE 5. Foot Switch Installed

1. Select a suitable location for the foot switch (P/N 063-0173-593) to be installed.

Note: *The foot switch should be installed in a location where the operator has easy access to it and is able to fully press the pedal.*

2. Using the holes in the foot switch as a template, drill holes in the floor of the cab.
3. Secure the foot switch to the floor by installing the supplied screws in each of the mounting holes.

Install the Node Harness

FIGURE 6. Node harness Connected to the Node

1. Install the two large, rectangular connectors of the node harness (P/N 115-4001-157) into the correct ports of the node.
2. Tighten the bolts on the connectors to secure the connections.
3. Connect the female 4-pin Deutsch connector on the node harness to the foot switch cable connector.
4. Connect the node harness to the operator presence switch, if applicable.
   a. Locate and disconnect the machine's existing OPERATOR PRESENCE connection behind the operator's seat.
   b. Connect the round 4-pin connector on the node harness to the machine's mating OPERATOR PRESENCE connector.

FIGURE 7. **Mechanical Drive Connection**

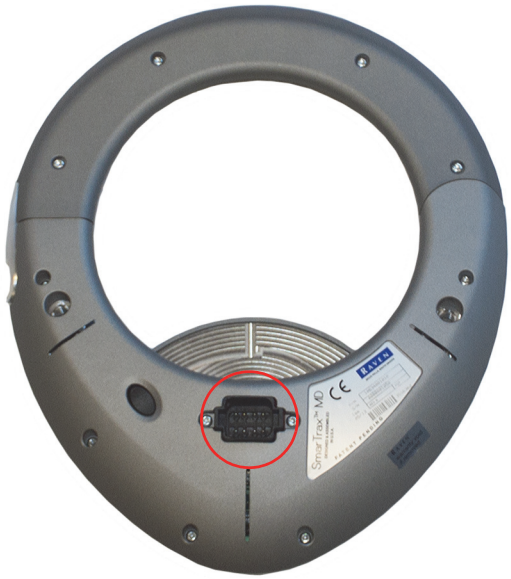

5. Connect the 8-pin Deutsch connector on the node harness into the 8-pin port of the mechanical drive (P/N 063-4001-010).
6. Install the terminator (P/N 063-0172-369) supplied with the node harness on the remaining 4-pin Deutsch connector.

Install the Chassis Cable - SmarTrax MD-Only Systems (If Applicable)

If the machine does not contain an existing chassis power system (such as AutoBoom, product control, etc.), it is necessary to install the chassis power cable to operate the SmarTrax MD system. If a CAN system already exists on the machine, refer to *Connect SmarTrax MD to an Existing Chassis Cable (If Applicable)* below to connect power to the SmarTrax MD system.

Note: *The chassis cable is sold separately. Contact your local Raven dealer for ordering information.*

1. Locate the SmarTrax chassis cable (P/N 115-4001-085).
2. Connect the TO SMARTRAX NODE connector from the chassis cable to the round 16-pin connector on the node harness (P/N 115-4001-157).
3. Connect the TO CONSOLE CABLE connector to the Raven console cable.
4. Install a terminator (P/N 063-0172-369) on the CAN cable connector.
5. Loop and tie-off the REMOTE SWITCH cable connection, securing it with plastic cable ties as necessary.

Note: *The REMOTE SWITCH connector is not used in the SmarTrax system. Ensure the cable is secured away from moving parts and heat sources.*

6. Connect the ring terminals to the battery.

Note: *The positive connectors are fused.*

Connect SmarTrax MD to an Existing Chassis Cable (If Applicable)

Note: *The SmarTrax MD interface tee is sold separately. Contact your local Raven dealer for ordering information.*

1. Locate and disconnect the connection between the Raven console cable and chassis cable on the machine's existing CAN system.
2. Install the SmarTrax MD interface tee cable (P/N 115-4001-070 or 115-4001-071) between the chassis and Raven console harness.
3. Connect the SmarTrax node harness (P/N 115-4001-157) to the remaining SmarTrax MD interface tee.

I

Important Safety Information 1
Electrical Safety 2
Introduction 3
Kit Contents 5
Preparing for Installation 4
Point of Reference 4
Recommendations 4
Updates 4

K

Kit Contents 5

M

Mechanical Drive Installation 9
Installing the Mechanical Drive 15
Installing the Spline and Ring Gear Assemblies 13
Reinstalling the Steering Wheel 14
Removing the Steering Wheel 9

N

Node and Wiring Installation
Connecting SmarTrax MD to an Existing Chassis Cable 24
Installing the Chassis Cable - SmarTrax MD-Only Systems 23
Installing the Foot Switch 21
Installing the Node Harness 22
Installing the SmarTrax MD Node 19
Mounting the SmarTrax MD Node 20
Node Mounting Locations 19

RAVEN

Limited Warranty

What Does this Warranty Cover?

This warranty covers all defects in workmanship or materials in your Raven Applied Technology Division product under normal use, maintenance, and service when used for intended purpose.

How Long is the Coverage Period?

Raven Applied Technology products are covered by this warranty for 12 months from the date of retail sale. In no case will the Limited Warranty period exceed 24 months from the date the product was issued by Raven Industries Applied Technology Division. This warranty coverage applies only to the original owner and is non-transferable.

How Can I Get Service?

Bring the defective part and proof of purchase to your Raven dealer. If the dealer approves the warranty claim, the dealer will process the claim and send it to Raven Industries for final approval. The freight cost to Raven Industries will be the customer's responsibility. The Return Materials Authorization (RMA) number must appear on the box and all documentation (including proof of purchase) must be included inside the box to be sent to Raven Industries.

What Will Raven Industries Do?

Upon confirmation of the warranty claim, Raven Industries will (at our discretion) repair or replace the defective product and pay for the standard return freight, regardless of the inbound shipping method. Expedited freight is available at the customer's expense.

What is not Covered by this Warranty?

Raven Industries will not assume any expense or liability for repairs made outside our facilities without written consent. Raven Industries is not responsible for damage to any associated equipment or products and will not be liable for loss of profit, labor, or other damages. The obligation of this warranty is in lieu of all other warranties, expressed or implied, and no person or organization is authorized to assume any liability for Raven Industries.

Damages caused by normal wear and tear, misuse, abuse, neglect, accident, or improper installation and maintenance are not covered by this warranty.

016-0171-537 Rev. A, E19889

RAVEN

Extended Warranty

What Does this Warranty Cover?

This warranty covers all defects in workmanship or materials in your Raven Applied Technology Division product under normal use, maintenance, and service when used for intended purpose.

Do I Need to Register My Product to Qualify for the Extended Warranty?

Yes. Products/systems must be registered within 30 days of retail sale to receive coverage under the Extended Warranty. If the component does not have a serial tag, the kit it came in must be registered instead.

Where Can I Register My Product for the Extended Warranty?

To register, go online to www.ravenhelp.com and select Product Registration.

How Long is the Extended Warranty Coverage Period?

Raven Applied Technology products that have been registered online are covered for an additional 12 months beyond the Limited Warranty for a total coverage period of 24 months from the date of retail sale. In no case will the Extended Warranty period exceed 36 months from the date the product was issued by Raven Industries Applied Technology Division. This Extended Warranty coverage applies only to the original owner and is non-transferable.

How Can I Get Service?

Bring the defective part and proof of purchase to your Raven dealer. If the dealer approves the warranty claim, the dealer will process the claim and send it to Raven Industries for final approval. The freight cost to Raven Industries will be the customer's responsibility. The Return Materials Authorization (RMA) number must appear on the box and all documentation (including proof of purchase) must be included inside the box to be sent to Raven Industries. In addition, the words "Extended Warranty" must appear on the box and all documentation if the failure is between 12 and 24 months from the retail sale.

What Will Raven Industries Do?

Upon confirmation of the product's registration for the Extended Warranty and the claim itself, Raven Industries will (at our discretion) repair or replace the defective product and pay for the standard return freight, regardless of the inbound shipping method. Expedited freight is available at the customer's expense.

What is Not Covered by the Extended Warranty?

Raven Industries will not assume any expense or liability for repairs made outside our facilities without written consent. Raven Industries is not responsible for damage to any associated equipment or products and will not be liable for loss of profit, labor, or other damages. Cables, hoses, software enhancements, and remanufactured items are not covered by this Extended Warranty. The obligation of this warranty is in lieu of all other warranties, expressed or implied, and no person or organization is authorized to assume any liability for Raven Industries.

Damages caused by normal wear and tear, misuse, abuse, neglect, accident, or improper installation and maintenance are not covered by this warranty.