# HYDRAULIC CONTROL FAST VALVE REPLACEMENT PARTS

063-0171-354 (3 GAL.)
063-0171-380 (8 GAL.)
063-0171-381 (16 GAL.)
063-0171-379 (30 GAL.)

| ITEM | DESCRIPTION | RAVEN PART # |
|---|---|---|
| 1 | Motor Assembly | 063-0171-358 |
| 2 | Valve Assembly | |
| | (3 Gallon) | 063-0159-717 |
| | (8 Gallon) | 063-0159-821 |
| | (16 Gallon) | 063-0159-716 |
| | (30 Gallon) | 063-0159-792 |
| 3 | Lock Washer, 5/16" | 313-1000-038 |
| 4 | 5/16-18 Hex Nut | 312-1001-075 |
| 5 | Valve Mounting Bracket | 107-0159-903 |
| 6 | Lock Washer, 1/4" | 313-1000-037 |
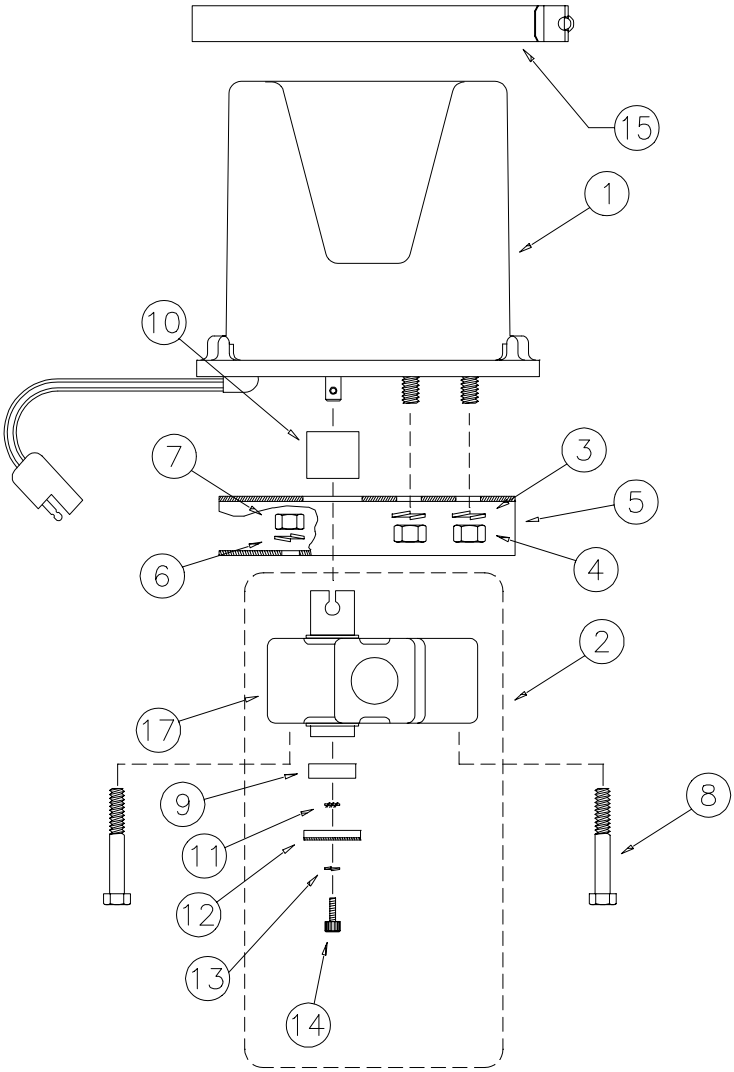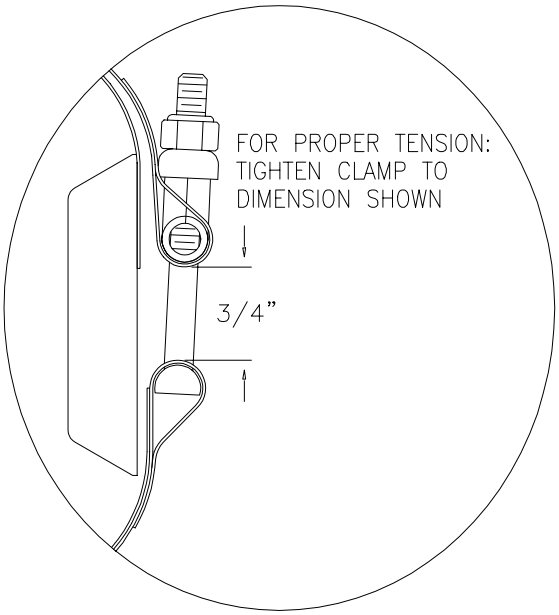
| ITEM | DESCRIPTION | RAVEN PART # |
|---|---|---|
| 7 | 1/4-20 Hex Nut | 312-1001-074 |
| 8 | 1/4-20 x 2 1/2" Hex Hd. Bolt | 311-0049-086 |
| 9 | Retainer, .3" Grease | 107-0159-905 |
| 10 | Retainer, 1" Grease | 107-0159-906 |
| 11 | Washer | 313-4000-010 |
| 12 | Cap, Grease Retainer | 107-0159-904 |
| 13 | Lockwasher | 313-1000-013 |
| 14 | Screw | 311-0068-185 |
| 15 | Clamp, U-Band | 435-3003-037 |
| 16 | Polarity Jumper (Not Shown) | 115-0159-415 |
| 17 | Valve ( 3 GPM) | 334-0002-028 |
| | Valve ( 8 GPM) | 334-0002-033 |
| | Valve (16 GPM) | 334-0002-026 |
| | Valve (30 GPM) | 334-0002-030 |