Force Evo Injection System Installation & Service Guide

Manual No. 016-0171-531 Rev. D 01/18 E30707

Disclaimer

While every effort has been made to ensure the accuracy of this document, Raven Industries assumes no responsibility for omissions and errors. Nor is any liability assumed for damages resulting from the use of information contained herein.

Raven Industries shall not be responsible or liable for incidental or consequential damages or a loss of anticipated benefits or profits, work stoppage or loss, or impairment of data arising out of the use, or inability to use, this system or any of its components. Raven Industries shall not be held responsible for any modifications or repairs made outside our facilities, nor damages resulting from inadequate maintenance of this system.

As with all wireless and satellite signals, several factors may affect the availability and accuracy of wireless and satellite navigation and correction services (e.g. GPS, GNSS, SBAS, etc.). Therefore, Raven Industries cannot guarantee the accuracy, integrity, continuity, or availability of these services and cannot guarantee the ability to use Raven systems, or products used as components of systems, which rely upon the reception of these signals or availability of these services. Raven Industries accepts no responsibility for the use of any of these signals or services for other than the stated purpose.

CHAPTER 1 IMPORTANT SAFETY INFORMATION

NOTICE

Read this manual carefully before installing the Raven Sidekick Pro, injection module or any other system components.

- Follow all safety information presented within this manual.
- Keep safety labels in good condition. Replace missing or damaged safety labels as necessary and verify labels are included on replacement parts or new equipment components. Replacement safety labels are available from any local Raven dealer.
- If you require assistance with any portion of the installation or service of Raven equipment, contact a local Raven dealer for support.

When operating the machine after installing the Raven Sidekick Pro, observe the following safety measures:

- Be alert and aware of surroundings.
- Do not operate any agricultural equipment while under the influence of alcohol or an illegal substance.
- Determine and remain a safe working distance from obstacles or other individuals. The equipment operator is responsible for disabling the system when a safe working distance has diminished.

Review the operation and safety instructions included with the implement and/or controller.

⚠ WARNING

CHEMICAL HANDLING AND SAFETY

Chemicals used in agricultural applications may be harmful to your health or the environment if not used responsibly. Review the safe, effective, and legal use and disposal of agricultural chemicals with a chemical supplier.

- Always follow safety labels and instructions provided by the chemical manufacturer or supplier.
- Store agricultural chemicals in original containers and do not transfer to unmarked containers or containers used for food or drink. Store chemicals in a secure, locked area away from human or livestock food and keep children away from storage areas.
- Avoid inhaling chemical dust or spray particulate and avoid direct contact with agricultural chemicals. Always wear appropriate personal protective equipment as recommended by the chemical and/or equipment manufacturer. Wash hands and face after using agricultural chemicals and before eating, drinking, or using the rest room.

- Seek medical attention immediately if illness occurs during or shortly after the use of chemicals.
- Fill, flush, calibrate, and decontaminate sprayer systems in an area where runoff will not reach ponds, lakes/ streams, livestock areas, gardens, or populated areas. Thoroughly flush or rinse equipment used to mix, transfer, and apply chemicals after use.
- Before servicing any component of the system, thoroughly flush or rinse components with water.
- Improper disposal of waste may threaten the environment and ecology. Dispose of empty containers properly. Triple-rinse empty containers and puncture or crush when disposing. Contact a local environmental or recycling center for additional information.

⚠ CAUTION

If the system malfunctions or becomes clogged, stop the engine or pump and relieve pressure from the spraying system before servicing.

Do not operate machinery without instruction and keep equipment in proper working condition. Unauthorized modification to equipment may impair machine function and/or safety and may shorten the working life of equipment.

Wear clothing appropriate for the job being performed and avoid loose fitting clothing while working on or near moving components. Keep long hair away from moving components.

INSTRUCTIONS FOR WIRE ROUTING

The word “harness” is used to mean all electrical leads and cables, bundled and unbundled. When installing harness, secure it at least every 30 cm (12in) to the frame. Follow existing harness as much as possible and use these guidelines:

Harness should not contact or be attached to:

- Lines and hoses with high vibration forces or pressure spikes
- Lines and hoses carrying hot fluids beyond harness component specifications

Avoid contact with any sharp edge or abrading surfaces such as, but not limited to:

- Sheared or flame cut edges
- Edges of machined surfaces
- Fastener threads or cap screw heads
- Ends of adjustable hose clamps
- Wire exiting conduit without protection, either ends or side of conduit
- Hose and tube fittings

Routing should not allow harnesses to:

- Hang below the unit
- Have the potential to become damaged due to exposure to the exterior environment. (i.e. tree limbs, debris, attachments)
- Be placed in areas of or in contact with machine components which develop temperatures higher than the temperature rating of harness components
- Wiring should be protected or shielded if it needs to route near hot temperatures beyond harness component specifications

Harnessing should not have sharp bends

Allow sufficient clearance from machine component operational zones such as:

- Drive shafts, universal joints and hitches (i.e. 3-point hitch)
- Pulleys, gears, sprockets
- Deflection and backlash of belts and chains
- Adjustment zones of adjustable brackets
- Changes of position in steering and suspension systems
- Moving linkages, cylinders, articulation joints, attachments
- Ground engaging components

For harness sections that move during machine operation:

- Allow sufficient length for free movement without interference to prevent: pulling, pinching, catching or rubbing, especially in articulation and pivot points
- Clamp harnesses securely to force controlled movement to occur in the desired harness section
- Avoid sharp twisting or flexing of harnesses in short distances
- Connectors and splices should not be located in harness sections that move

Protect harnesses from:

- Foreign objects such as rocks that may fall or be thrown by the unit
- Buildup of dirt, mud, snow, ice, submersion in water and oil
- Tree limbs, brush and debris
- Damage where service personnel or operators might step or use as a grab bar
- Damage when passing through metal structures

IMPORTANT: Avoid directly spraying electrical components and connections with high pressure water. High pressure water sprays can penetrate seals and cause electrical components to corrode or otherwise become damaged. When performing maintenance:

- Inspect all electrical components and connections for damage or corrosion. Repair or replace components, connections, or cable as necessary.
- Ensure connections are clean, dry, and not damaged. Repair or replace components, connections, or cable as necessary.
- Clean components or connections using low pressure water, pressurized air, or an aerosol electrical component cleaning agent.
- Remove visible surface water from components, connections, or seals using pressurized air or an aerosol electrical component cleaning agent. allow components to dry completely before reconnecting cables.

INSTRUCTIONS FOR HOSE ROUTING

The word “hose” is used to mean all flexible fluid carrying components. Follow existing hoses as much as possible and use these guidelines:

Hoses should not contact or be attached to:

- Components with high vibration forces
- Components carrying hot fluids beyond component specifications

Avoid contact with any sharp edge or abrading surfaces such as, but not limited to:

- Sheared or flame cut edges
- Edges of machined surfaces
- Fastener threads or cap screw heads
- Ends of adjustable hose clamps

Routing should not allow hoses to:

- Hang below the unit
- Have the potential to become damaged due to exposure to the exterior environment. (i.e. tree limbs, debris, attachments)
- Be placed in areas of or in contact with machine components which develop temperatures higher than the temperature rating of hose components
- Hoses should be protected or shielded if it needs to route near hot temperatures beyond hose component specifications

Hoses should not have sharp bends

Allow sufficient clearance from machine component operational zones such as:

- Drive shafts, universal joints and hitches (i.e. 3-point hitch)
- Pulleys, gears, sprockets
- Deflection and backlash of belts and chains
- Adjustment zones of adjustable brackets
- Changes of position in steering and suspension systems
- Moving linkages, cylinders, articulation joints, attachments
- Ground engaging components

For hose sections that move during machine operation:

- Allow sufficient length for free movement without interference to prevent: pulling, pinching, catching or rubbing, especially in articulation and pivot points
- Clamp hoses securely to force controlled movement to occur in the desired hose section
- Avoid sharp twisting or flexing of hoses in short distances

Protect hoses from:

- Foreign objects such as rocks that may fall or be thrown by the unit
- Buildup of dirt, mud, snow, ice, submersion in water and oil
- Tree limbs, brush and debris
- Damage where service personnel or operators might step or use as a grab bar
- Damage when passing through metal structures
- High pressure wash

CHAPTER 2 INTRODUCTION TO THE FORCE® EVO INJECTION SYSTEM

OVERVIEW

The Force® injection system is designed for use on planting and seeding implements with a liquid fertilizer application delivery system and a carrier product tank already installed. Carrier rate control is not included with the Force® system, but is available as an optional feature.

NOTE: Contact a local Raven dealer for more information about adding carrier rate control to your existing Force® Evo injection system.

The Force® Evo injection system has an output range of 1 to 40 oz./min [0.3 to 11.8 dL/min]. The system must be operated within this range to ensure proper operation of the injection pump and application of injected products. To help ensure that the minimum injection rate is achieved, the smallest section or implement width for use with Force® Evo injection system should not be below 8 row units.

NOTE: Refer to the Injection Rate Calculations section on page 11 for information on verifying the pump output required for an operation.

CARE AND USE

Proper care and maintenance is critical to ensure proper operation of the Force® Evo injection system. Please review and perform the following maintenance items as appropriate to help ensure the best performance and longest service life of the Force® Evo injection system:

IMPORTANT: Always wear appropriate personal protective equipment when working with the Force® Evo injection system. Review proper chemical handling, storage and disposal practices with your chemical provider before performing system maintenance and refer to the chemical label as necessary when working with agricultural chemicals.

- Flush the carrier product lines if field operations will be suspended for more than 6 hours. Failure to flush the system will result in chemicals solidifying in carrier lines and will effect system operation.
- Flush the injection pump and system if field operations will be suspended for 3 or more days. Failure to flush the injection system will result in chemicals solidifying in the injection lines and components, will effect system operation and may reduce the service life of the injection pump.
- Flush and winterize the carrier product lines and injection system at the end of the season or when storing the implement for periods longer than 3 months.

REPLACEMENT PARTS

TABLE 1. Available Replacement Parts

Description	Part Number
Replacement Cabinet with Shelving	063-0173-521
Colder (Quick) Coupler	333-0006-029

NOTE: Review the Raven Sidekick Pro™ or Sidekick Pro ISO manuals for information on replacement parts for the injection pump.

CHAPTER 3 INSTALLATION AND PREPARATION

BEST INSTALLATION PRACTICES

Please review and verify the following items when installing the Force® Evo injection system:

- Select a mounting location where the Force® Evo cabinet assembly, or connected plumbing and hoses, will not interfere with, or be damaged by, the normal planter folding or leveling functions or operations.
- The Force® Evo cabinet must be mounted upright on the implement with the bottom mounting brackets pointing toward the ground. The injection pump must remain in an upright position (calibrator pointing upward) at all times during pump operation.
- The cabinet should not be mounted to any wing element which rotates the cabinet away from this orientation during folding operations to ensure that chemical containers remain in the cabinet rack and connected with the internal cabinet plumbing.
- The injection pump must remain in an upright position (calibrator pointing upward) at all times during pump operation. This orientation is important both to ensure proper pump operation and to ensure that the chemical pouches do not fall off the rack
- The point of injection should be after (downstream) the carrier pump and before (upstream) any manifold or flow divider in carrier product lines. It is recommended to place the point of injection as close as possible to the flow divider or manifold to reduce the amount of chemical wasted when flushing the injection system.
- Keep hose lengths as short as possible. Long hose runs will use more chemical for priming and calibration processes and will create more chemical waste when flushing the injection system.
- The Force® Evo cabinet weighs approximately 140 pounds [63.5 kg] without chemical boxes loaded (add approximately 100 pounds [45 kg] for chemical boxes). Be sure that all materials and hardware utilized for fabrication of a mounting solution is capable of securing the weight of the injection cabinet and chemicals.
- Make sure to install the supplied carrier and injection check valves to prevent back flow or contamination of the product reservoirs. The arrow stamped on the check valve must point in the direction of product flow.
- It is not necessary for injected products or chemicals to be measured by a flow meter. Depending upon the type of applications or chemical mixtures the injection system will normally be used with, it may be more desirable to place the injection point after any flow meter in the carrier product line. This configuration will minimize the exposure of the flow meter to corrosive chemicals and may extend the life of the flow meter.

FORCE® EVO CABINET MOUNTING

The following steps may be of assistance while mounting the Force® Evo injection cabinet on the implement.

1. Select a mounting location to provide a stable platform for the Force® Evo injection system. The selected mounting location should provide adequate clearance for the cabinet and allow normal implement functions without interference from, or damage to, the cabinet.
2. Fabricate a mounting bracket to secure the cabinet an integral frame member of the implement. The Force® Evo injection cabinet must be secure to avoid shifting during normal field operation.

3. Use hardware of adequate strength to fasten the fabricated mounting bracket to the brackets attached to the bottom of the Force® Evo cabinet. Use as many mounting points as possible to ensure that the cabinet is securely fastened to the implement.

NOTE: A replacement Force® Evo injection cabinet with shelving (P/N 063-0173-521) is available through a local Raven dealer.

INJECTION PLUMBING INSTALLATION

The Force® Evo injection system kit is designed to interface with existing 1" carrier product lines. The kit includes the following parts for installation of the "point of injection" including check valves and in-line mixer. Review the information in the following sections for assistance with assembling and installing the injection plumbing and connecting the Force® Evo injection cabinet to the point of injection.

TABLE 1. Point of Injection Plumbing Components

Item #	Part Number	Qty.	Description
1.	063-0173-432	1	Assembly, Low Flow 1" NPT Mixer
2.	214-0001-014	20 ft. [9 m]	Hose, 1/2" Reinforced EVA
3.	333-0002-030	1	Fitting, 1/2" HB x 3/8" MNPT
4.	333-0002-277	1	Fitting, 1" Gauge Poly Tee
5.	333-0003-034	1	Fitting, 1/2" x 3/8" NPT Poly Bushing
6.	333-0003-042	1	Fitting, 1" x 1/2" NPT Poly Bushing
7.	333-0008-156	2	Fitting, 1" Poly Pipe Nipple
8.	333-0008-271	1	Fitting, 3/8" NPT SS Pipe Nipple
9.	333-0009-061	1	Fitting, 1/4" NPT Poly Plug
10.	333-0011-078	1	Valve, 3/8" NPT SS Check
11.	333-0011-090	1	Valve, 1" NPT Poly Check
12.	333-0002-031	1	Fitting, 1/2" HB x 1/2" NPT
13.	435-3003-002	8	Hose Clamp, 1/2" Worm Drive
14.	435-1000-003	12	Cable Tie, 14-1/2" Black Nylon
15.	334-0001-054	1	Valve, 3-Way Continuous Flow
16.	333-0002-047	1	Fitting, 1/2" x 1/2" HB Elbow
17.	333-0002-046	1	Fitting, 1/2" x 3/8" HB Elbow

NOTE: Check valves are used in both the carrier and injection lines to prevent back flow and contamination of carrier and chemical reservoirs. The in-line mixer should be installed after the point of injection to ensure even mixing of the injected product.

FIGURE 1. Mixer and Check Valve Assembly Diagram

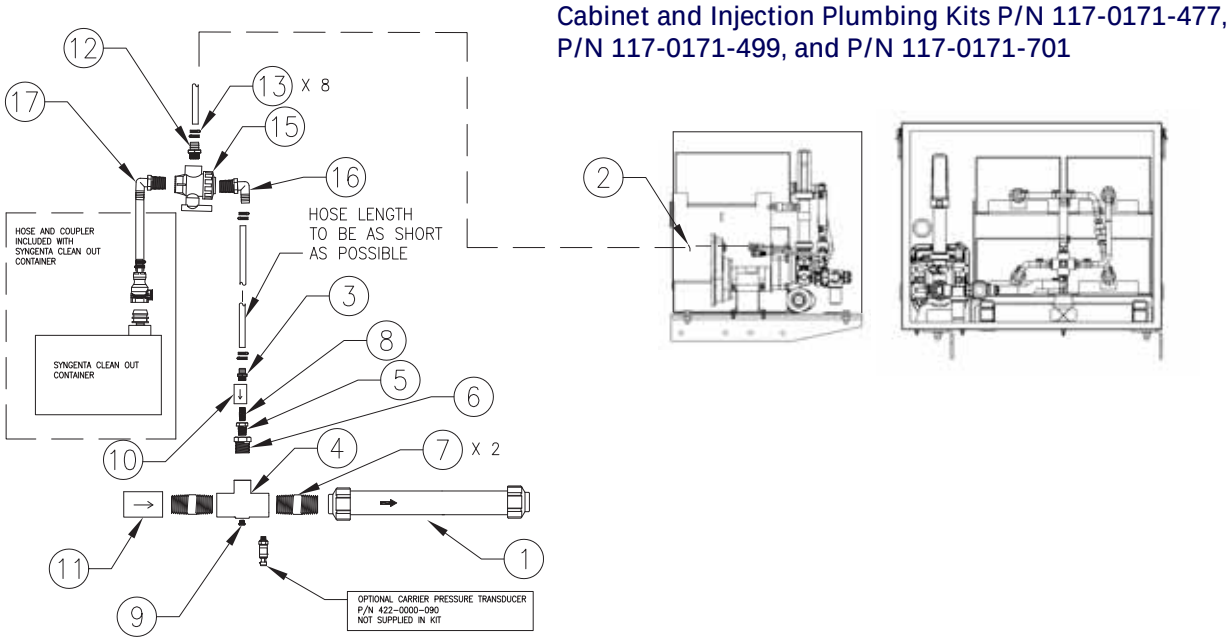

POINT OF INJECTION PLUMBING ASSEMBLY PROCEDURE

Review the following procedure for assistance assembling the point of injection components shown in Figure 1 on page 9. This assembly procedure must be done in preparation for connecting the Force® Evo plumbing into the existing carrier product line.

NOTE: Use pipe sealant (not supplied) on all fittings. Tighten all fittings with a pipe wrench as instructed.

1. Locate the supplied 1″ tee fitting (item 4) and install the 1/4″ plug (item 9). Tighten the fitting until snug.

NOTE: An optional pressure transducer (P/N 422-0000-090) may replace the 1/4″ plug to monitor pressure during field operations. Contact a local Raven dealer for more information.

2. Thread a 1″ pipe fitting (item 7) into each of the through ports of the tee fitting.
3. Thread the supplied 1″ check valve (item 11) onto one of the pipe fittings. Be sure that the arrow formed on the check valve body points toward the tee fitting. Tighten the check valve and pipe fitting into the tee fitting.
4. Thread the in-line mixer assembly (item 1) onto the remaining pipe fitting installed into the tee fitting. Be sure that the arrow on the mixer assembly points away from the tee fitting. Tighten the mixer an pipe fitting into the tee fitting.
5. Thread the supplied 1″ x 1/2″ bushing (item 6) into the branch of the tee fitting.
6. Thread the supplied 1/2″ x 3/8″ bushing (item 5) into the installed bushing and thread the 3/8″ pipe nipple (item 8) into the bushing.
7. Thread the supplied 3/8″ check valve onto the pipe fitting. Be sure that the arrow formed on the check valve body points toward the tee fitting. Tighten the check valve, pipe fitting and bushings to the tee fitting.
8. Thread the 3/8″ MNPT to 1/2″ hose barb fitting (item 3) into the check valve and tighten.
9. The point of injection plumbing assembly is ready for installation on the implement.

POINT OF INJECTION INSTALLATION

Review the following steps for information on installing the point of injection assembly into the existing carrier product line on the implement.

1. Select a point in the carrier product line in which the point of injection plumbing assembly may be installed in the carrier line. Review the Best Installation Practices section on page 7 for more information on considerations for the location of the point of injection.

NOTE: Use the point of injection assembly to "layout" or help determine the best installation location. The point of injection should be as close to the Force® Evo injection cabinet as possible to help reduce the amount of chemical wasted when flushing the injection system.

2. Install the point of injection assembly so that carrier product flow through the 1" check valve and 1" mixer follows the arrows formed on the check valve and mixer assemblies. Be sure to use pipe sealant on the check valve and mixer threads.
3. If necessary for your implement or the existing plumbing, secure the point of injection assembly to an integral implement frame using appropriate hardware.

3-WAY VALVE AND FINAL PLUMBING PROCEDURE

The 3-way valve provided with the Force® Evo system is required for proper flushing and winterizing of the Force® Evo injection system and allows the operator to properly dispose of chemicals more easily. Review the following steps for more information and assistance with installation of the 3-way valve and final plumbing connections for the Force® Evo injection system.

NOTE: Use pipe sealant (not supplied) on all fittings. Tighten all fittings with a pipe wrench as instructed.

1. Select a location for the 3-way valve (item 15) used with the Force® Evo system. The valve should be located as close to the point of injection as possible within easy reach of the operator.

NOTE: Keep all hose lengths as short as possible to reduce the amount of chemical waste when flushing or winterizing the system.

2. Thread the supplied 1/2" hose barb fitting (item 12) into the 3-way valve port opposite of the valve handle. Tighten the fitting.
3. Thread the supplied hose barb elbow fittings (item 16 and item 17) into the through ports on the 3-way valve and tighten.
4. Place two of the supplied hose clamps (item 13) over the supplied hose (item 2) and press the hose onto the 1/2" hose barb elbow.
5. Place and tighten the hose clamps to secure the hose to the hose barb.
6. Place two of the supplied hose clamps (item 13) over the remaining hose section (item 2) and press the hose onto the 1/2" hose barb fitting installed in the branch of the 3-way valve.
7. Place and tighten the hose clamps to secure the hose to the hose barb.
8. Route the hose through the back of the Force® Evo cabinet.
9. Cut the hose to the length necessary to connect to the injection pump outlet facing toward the rear of the cabinet enclosure.
10. Place two of the supplied hose clamps (item 13) over the hose section and press the hose onto the pump outlet port.
11. Place and tighten the hose clamps to secure the hose to the hose barb.

NOTE: It will be necessary to know the length of hose used between the injection pump outlet and point of injection. Measure and record the hose length for use when setting up for field operations.

CABLE CONNECTIONS TO THE FORCE® EVO SYSTEM

Refer to Chapter 5, System Diagrams and Ordering Instructions, for system connection diagrams and review the Raven Sidekick Pro™ or Sidekick Pro™ ISO manual required cabling connections to the injection pump. For additional assistance with cabling options, contact a local Raven dealer.

IMPORTANT: If a Raven control console will not be installed to control the liquid carrier, the installer must provide for the following items:

- When the carrier product is shut off, the injection pump must stop. The carrier control must not allow the injection pump to operate in a "dead head" condition (e.g. injection pump running with carrier and section valves closed) at any time.
- When the carrier product is turned on, the injection pump must turn on. The carrier control must not allow skips in the injected chemical coverage.

INJECTION RATE CALCULATIONS

Before operating the Force® Evo injection system, verify that the system will be able to meet the expected output of the operation. Adjust the operation speeds or injection rate as necessary to ensure that the injection pump is capable of performing in the anticipated operation conditions.

To calculate the volume per minute per row unit, use the following formula:

$$\text{FPR} = \frac{\text{Rate} \times \text{Spacing} \times \text{Speed}}{5940[60,000]}$$

Where FPR is the flow rate per row, Rate equals the target injection rate in oz./acre [dL/ha], spacing is the row spacing in inches [centimeters] and speed is the normal or maximum vehicle speed during operation in mph [km/hr].

Multiply the flow rate per row to find the total flow rate for the chemical injection.

FOR EXAMPLE:

Assume that the target rate is 8 oz./acre [5.8 dL/ha], row unit spacing of 30 inches [75 centimeters] and a typical vehicle speed of 5 mph [8 km/hr] on a 16 row implement.

English (US) Units	Metric (SI) Units
$\text{FPR} = \frac{8 \times 30 \times 5}{5,940}$	$\text{FPR} = \frac{5.8 \times 75 \times 8}{[60,000]}$

Therefore, the flow rate is 0.2 oz./min. [0.06 dL/min.] per row and the total flow rate for the chemical injection is 3.2 oz./min [0.96 dL/min.].

CHAPTER 4 SYSTEM OPERATION

SYSTEM OPERATION OVERVIEW

The Force® Evo injection system utilizes replaceable chemical boxes housed within the Force® Evo cabinet on a rack system. No chemical reservoirs to refill or rinse between operations.

When the injection system is empty, disconnect and remove the empty boxes from the cabinet racks and replace with prefilled boxes. A 0.3 PSI [2 kPa] check valve has been installed in the cabinet rack to ensure that chemical is drawn from the lower, right box last during normal operations. Once the last box has been exhausted, the injection system will need to be recharged with chemical.

NOTE: Prior to operating the system after installation, it is recommended to flush the injection lines with clean water to rinse out any manufacturing or installation debris and to check plumbing connections for leaks. Refer to the Flushing the Force® Evo System section on page 13 for details on flushing and rinsing the injection or carrier system.

Set the 3-way valve to by-pass the point of injection to prevent debris from plugging the check valves and in-line mixer.

FLUSHING THE FORCE® EVO SYSTEM

IMPORTANT: If the application is suspended for more than 6 hours, the carrier product lines, must be flushed of injected or mixed chemical. The Force® Evo injection system must be flushed of chemical if the application is suspended for 3 or more days.

Failure to flush the system will result in chemical solidifying in system components, reduced system accuracy and shorter component service life.

PROCEDURE TO FLUSH THE CARRIER PRODUCT LINES

If the field operation must be suspended for more than a few hours, it is recommended to flush the carrier system of mixed or injected chemical. If the system will not be used for 6 hours, the carrier lines must be flushed of injected chemical to ensure that the chemical does not solidify in valves, the in-line mixer or other system components. To flush the system of mixed chemical in the carrier product lines:

1. Toggle the master switch to the off position and set the injection pump control to off.
2. If a Raven control console is installed for carrier control, enter a self test speed of 8 mph [13 km/h].
3. Access the distance tally on the control console and zero the distance display.

4. Toggle the master switch and all section switches to on.

NOTE: Do not run the injection pump during this procedure.

Refer to the Raven control console manual for details on entering and using the self test speed feature. The self test speed will clear if any signals are received from an actual speed sensor. To keep the self test speed from clearing during the rinsing procedure.

5. Run the system until the distance display shows 1500 ft [457 m].
6. When the distance value reaches 1500 ft [457 m], the carrier lines should be flushed of injected or mixed chemical. Toggle the master switch off and shutdown the equipment.

IMPORTANT: The system must be recharged prior to resuming the field operation. Refer to the "Procedure to Flush the Injection System" section on page 14 for more information.

PROCEDURE TO FLUSH THE INJECTION SYSTEM

IMPORTANT: When working with pesticides and other ag chemicals, personal protective gear must be worn. refer to the chemical manufacturer's label for required personal protective equipment. Decontaminate all equipment before making repairs or storing the implement.

It is normally acceptable to leave chemical that has not reached the point of injection in the injection lines for a short period. As long as the chemical is not mixed and the injection system remains sealed, the chemical should remain soluble and flow when the field operation resumes within a couple of days.

If the implement will not be used for more than a few days, or will be stored for part of the season, the injection system must be flushed and rinsed thoroughly. When storing the implement, it is recommended to winterize the injection pump and chemical lines to help ensure chemical residues do not damage the injection pump. Refer to the Winterizing the Force® Evo Injection System section on page 18 for details on winterizing the Force® Evo injection system.

NOTE: It is also recommended to flush the injection system prior to the initial operation to rinse out manufacturing or installation debris.

To flush the injection system:

1. Disconnect and remove the chemical boxes from the cabinet racks. Properly store or dispose of chemical containers according to the chemical manufacturer's recommended procedures.
2. Connect the chemical collection container to the 3-way valve at the in-line mixer. Contact a chemical supplier to obtain the chemical collection kit.
3. Place the 3-way valve in the position to by-pass the point of injection and to discharge the system to the chemical collection container.
4. Next, connect the clean out hose to the quick coupler for the upper, left container in the injection cabinet.
5. Secure the open end of the clean out hose above the coupler to keep chemical from flowing out the hose. This will vent the injection manifold to air.

NOTE: To rinse the injection pump and plumbing, place the open end of the clean out hose in a bucket of water and perform the following steps.

6. If a Raven control console is installed for carrier control, enter a self test speed of 6 mph [10 km/h] and set the injection pump to automatic control mode.

NOTE: Do not run the carrier during this procedure.

Refer to the Raven control console manual for details on entering and using the self test speed feature. The self test speed will clear if any signals are received from an actual speed sensor. To keep the self test speed from clearing during the rinsing procedure.

7. Toggle the injection pump to automatic control mode.
8. Toggle the master switch and at least 1 section switch to the on position.
9. Run the injection pump for 2 minutes.
10. Toggle the injection pump to the off position.
11. Move the clean out hose to the next coupler and repeat step 7 through step 11 until all box connectors in the injection cabinet have been flushed or rinsed.

NOTE: Do not leave rinse water in the injection system during cold weather. Refer to the Winterizing the Force® Evo Injection System section on page 18 for information on winterizing the Force® Evo system.

CHARGING THE FORCE® EVO INJECTION SYSTEM

Both the carrier and injection systems must be charged with chemical to ensure even coverage during a field operation. The system must be charged during the initial system start up after installation or when the system is pulled out of storage.

NOTE: Be sure to flush and rinse the system of antifreeze when the system has been in winter storage. Charge the carrier system before performing the following procedure.

The quick coupler with the 0.3 PSI [2 kPa] check valve is intended to be connected to the box in the lower, right corner of the cabinet rack. This is intended to ensure that the cabinet manifold is always primed with chemical during operation. If the last box is depleted, the system will need to be recharged before resuming field application.

Replacement Colder quick couplers (P/N 333-0006-037) may be ordered. This part number is compatible with Force® Evo and can be identified with the green latch button.

1. Load chemical boxes into the Force® Evo cabinet.
2. Connect the quick coupler with the 0.3 PSI [2 kPa] check valve to the chemical box in the lower, right corner of the cabinet rack. For initial priming, or if the last box is fully depleted, do not connect the remaining chemical boxes until instructed.

FIGURE 1. Force® Evo Injection Cabinet Manifold Diagram

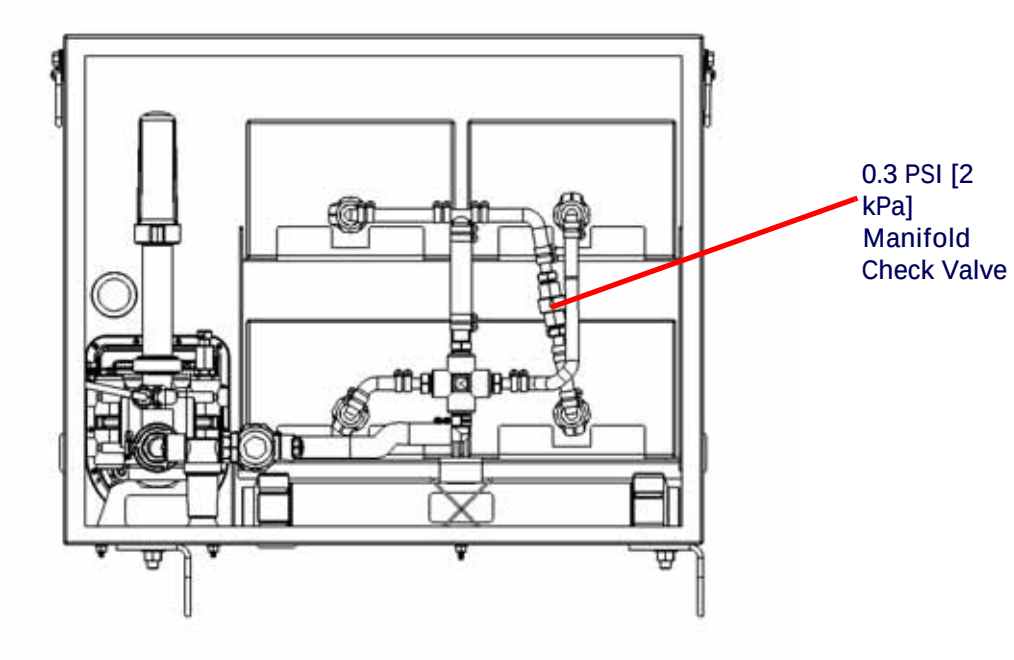

NOTE: Use the supplied coupler tool to avoid pushing the coupler into the chemical box.

3. Perform a pump priming procedure. Be sure that the 3-way valve is set to direct chemical to the point of injection. Refer to the Raven Sidekick Pro™ or Sidekick Pro ISO manual for details on priming the injection pump.
4. Once the pump is primed, connect the remaining chemical boxes to the quick couplers on the cabinet manifold.
5. Repeat the priming procedure two more times to draw chemical from the connected boxes and eliminate air pockets in the cabinet manifold.
6. Perform a pump calibration test to verify pump operation. Refer to the Raven Sidekick Pro™ or Sidekick Pro ISO manual for details on performing a calibration with the closed calibration system.
7. If the pump passes the calibration test, proceed to the Charging the Carrier Line with Injected Chemical section on page 16 to complete the chemical charging process and prepare the system for field operations.

   If the pump fails to calibrate properly, recheck the pump calibration settings in the control console and perform another priming procedure. Restart the pump calibration process. If the pump continues to fail the calibration, contact a local Raven dealer for additional assistance.

CHARGING THE CARRIER LINE WITH INJECTED CHEMICAL

Review the following procedure once the injection pump is primed and successfully calibrated to prime the carrier lines with injected chemical.

1. Measure and record the hose length between the injection pump outlet and the point of injection. Refer to Table 1, “Calculating Hose Volume,” below and calculate the volume of chemical necessary for the injection system hose.

TABLE 1. Calculating Hose Volume

Hose Internal Diameter	Ounces per Linear Foot of Hose	Deciliters per Linear Meter of Hose
3/8″ [0.95 cm]	0.734	0.712
1/2″ [1.27 cm]	1.305	1.27
3/4″ [1.9 cm]	2.937	2.85
1″ [2.54 cm]	5.224	5.07
1-1/4″ [3.175 cm]	8.16	7.92
1-1/2″ [3.8 cm]	11.75	11.4
2″ [5.08 cm]	20.90	20.27
2-1/2″ [6.35 cm]	32.65	31.67
3″ [7.62 cm]	47.02	45.61

NOTE: 1 gallon equals 128 oz [0.379 dL].

2. On the control console, enter a value of zero for the volume tally of injected chemical product.
3. Place the injection pump in automatic control mode and enter a self test speed of 6 mph [9 km/h].
4. Monitor the volume tally for the injected chemical. When the necessary volume required for the injection plumbing has been dispensed through the pump, set the pump control mode back to off.
5. Measure the hose length from the point of injection to the section tips. To prime the carrier lines with injected chemical to all sections, record the longest hose length and calculate the volume of chemical necessary for the carrier lines.
6. Toggle the master switch and all section switches to the on position and monitor the carrier volume until the calculated volume has been dispensed through the carrier product system.
7. The system should now be fully charged with injected chemical.

IMPORTANT: Be sure to flush any injected and mixed chemical from the carrier product lines if application will be suspended for six hours or longer.

FORCE® EVO SYSTEM OPERATION

During normal field operations, the Force® Evo injection system will draw chemical from the lower, right connector with the 0.3 PSI [2 kPa] check valve last.

FIGURE 2. Force® Evo Injection Cabinet Manifold Diagram

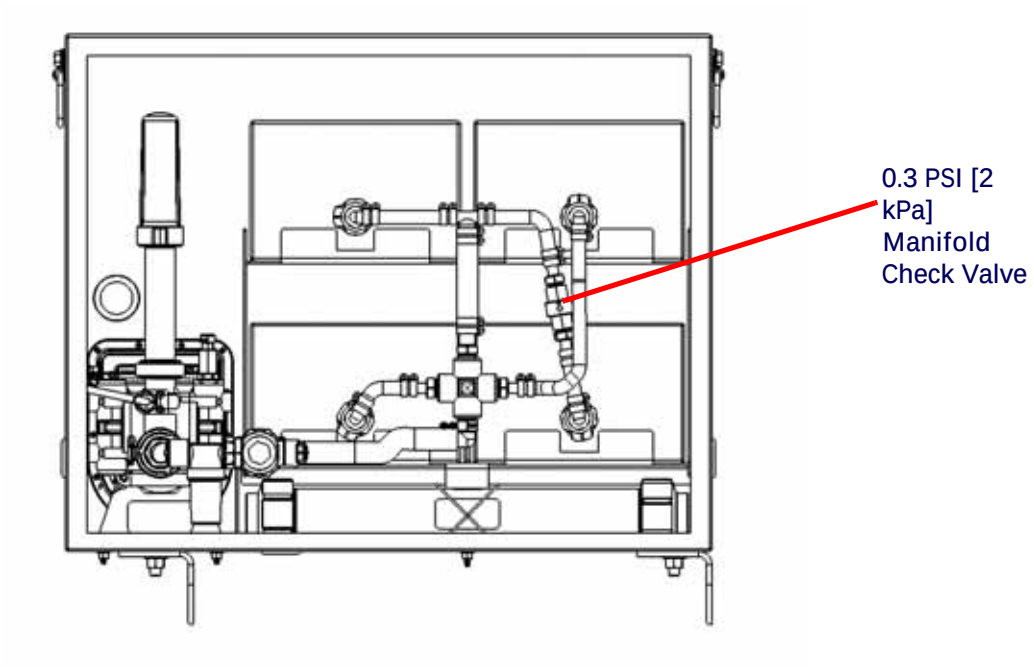

If this box is fully exhausted of chemical, the injection system lines will need to be recharged with chemical before resuming the application.

When the last box is empty, the system will develop a higher than normal vacuum pressure. When this occurs, the control console will display a vacuum error.

NOTE: A vacuum error may also occur if the strainer is plugged or a chemical flow restriction has occurred.

Refer to the Raven Sidekick Pro™, Sidekick Pro ISO, or Sidekick PRO ICD manuals for details on using the specific control console to control the injection system. Review the console specific operation manual for details on setting up and controlling a liquid carrier during field operations.

WINTERIZING THE FORCE® EVO INJECTION SYSTEM

1. Flush and rinse the Force® Evo injection system.
2. Connect the clean out hose to the quick coupler for the upper, left container in the injection cabinet.
3. Place the open end of the clean out hose into a container of antifreeze designed for recreational vehicles (R.V. antifreeze).
4. If a Raven control console is installed for carrier control, enter a self test speed of 6 mph [10 km/h] and set the injection pump to automatic control mode.

NOTE: Refer to the Raven control console manual for details on entering and using the self test speed feature. The self test speed will clear if any signals are received from an actual speed sensor. To keep the self test speed from clearing during the rinsing procedure.

5. Set the 3-way valve to the point of injection to route liquid into the carrier lines.
6. Set the carrier control to a normal rate during this procedure.
7. Toggle the injection pump to automatic control mode.

8. Toggle the master switch and at all section switches to the on position.
9. Run the injection pump for 2 minutes.
10. Toggle the injection pump to the off position.
11. Move the clean out hose to the next coupler and repeat step 7 through step 11 until all box connectors in the injection cabinet have antifreeze in the lines.

NOTE: Use caution not to run out of antifreeze during this procedure.

Before operating the Force® Evo injection system, flush and rinse the system to remove all antifreeze from the injection lines before charging the carrier or injection systems.

CHAPTER 5 SYSTEM DIAGRAMS AND ORDERING INSTRUCTIONS

Refer to the following sections for ordering information and cable connection details.

RAVEN CANBUS SYSTEMS

FIGURE 1. Ordering Instructions for SCS 4400 Systems (D/N 016-0171-531)

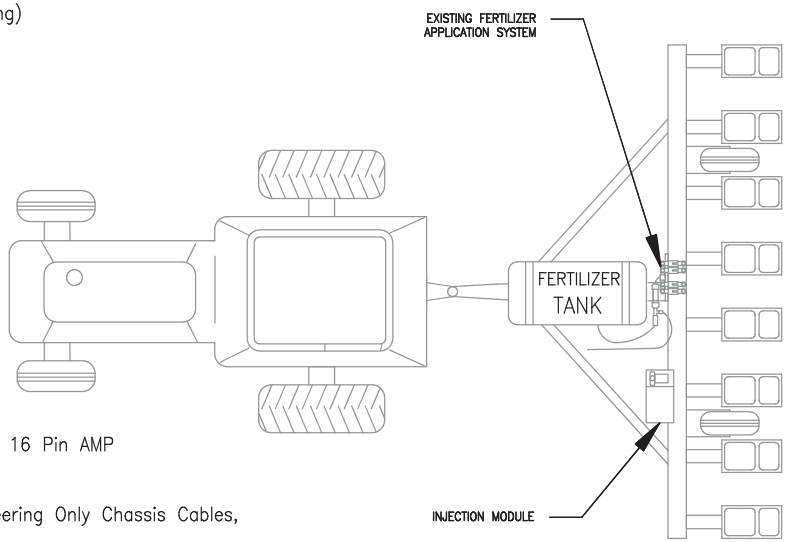

A
ORDER 1Console Cable:

115–0172–007 SCS 4400 Console Cable, Liquid Product, Gen II (includes chassis cabling)

B
Optional:
1.Remote Implement Switch 063–0172–967, requires adaptor cable 115–0172–040.

115–0171–448 Cable, 10' Extension, Cab Cable to Chassis Cable
115–0171–501 Cable, 20' Extension Cable

C
Select One (1) CAN/Power Tee Extension Cable for Each Node

115–0171–928 Cable, CAN/Power Implement Tee, 12" Lg
115–0171–951 Cable, CAN/Power Implement Extension Tee, 6' Lg
115–0171–916 Cable, CAN/Power Implement Extension Tee, 12' Lg
115–0171–917 Cable, CAN/Power Implement Extension Tee, 24' Lg
115–0171–934 Cable, CAN/Power Implement Extension Tee, 36' Lg

D
Select One (1) CAN TERMINATOR per implement 063–0173–224 Terminator, CAN Passive, 16 Pin AMP

E
Select One (1) In–Cab CAN terminator (already included in OmniRow Planter System, Steering Only Chassis Cables, and Boom Sense/Speed/CAN SwitchBox Kits)

063–0172–369 Terminator, CAN Passive

F
Select One (1) Speed Sensor Extension Cable (if applicable)

115–0171–262 10'
115–0159–032 12'
115–0171–239 18'
115–0159–018 24'
115–0171–241 29'
115–0171–225 34'

FIGURE 2. Cable Connections for SCS 4400 Systems (D/N 016-0171-531)

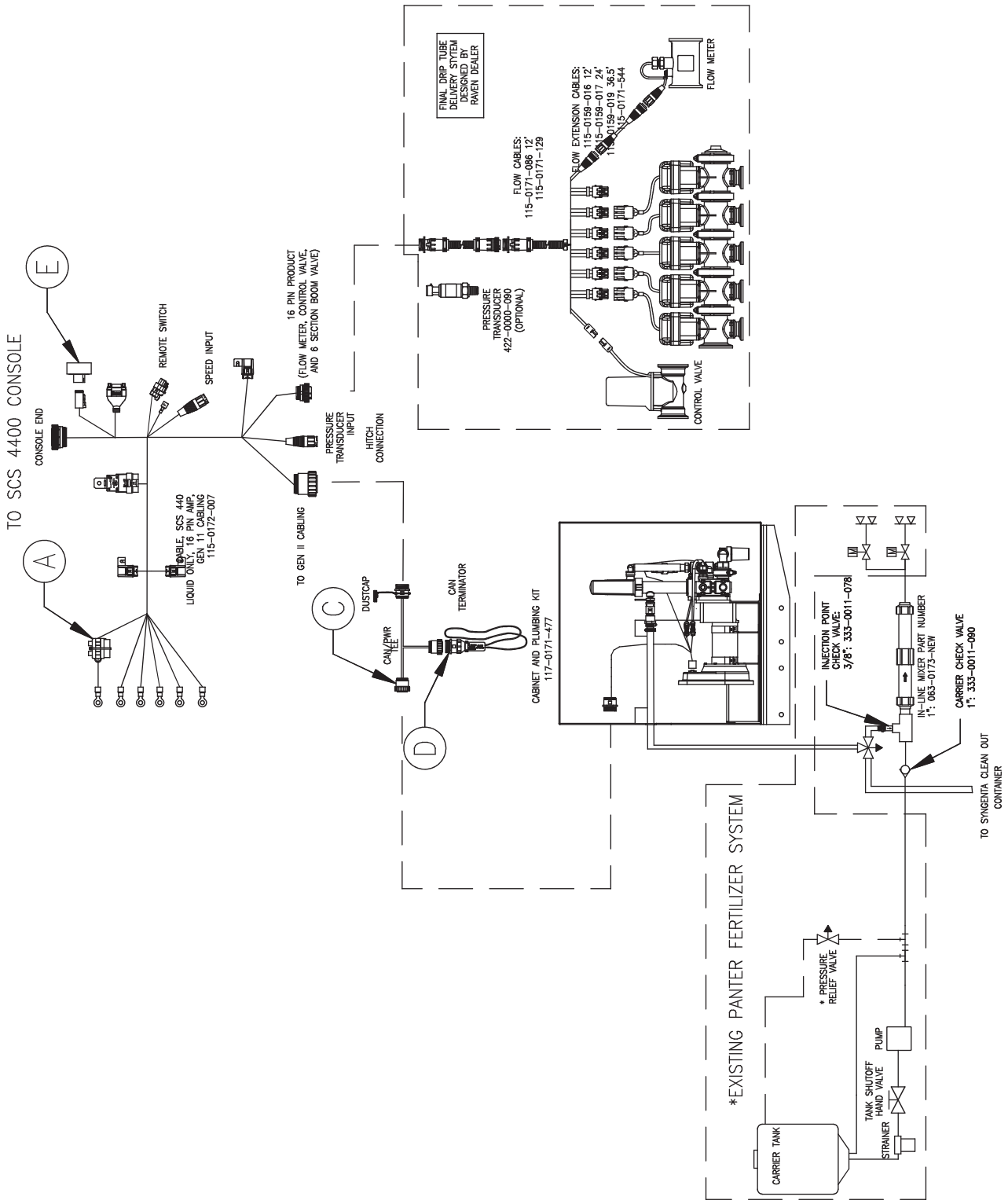

FIGURE 3. Ordering Instructions for Envizio Pro/Viper Pro Systems (D/N 016-0171-531)

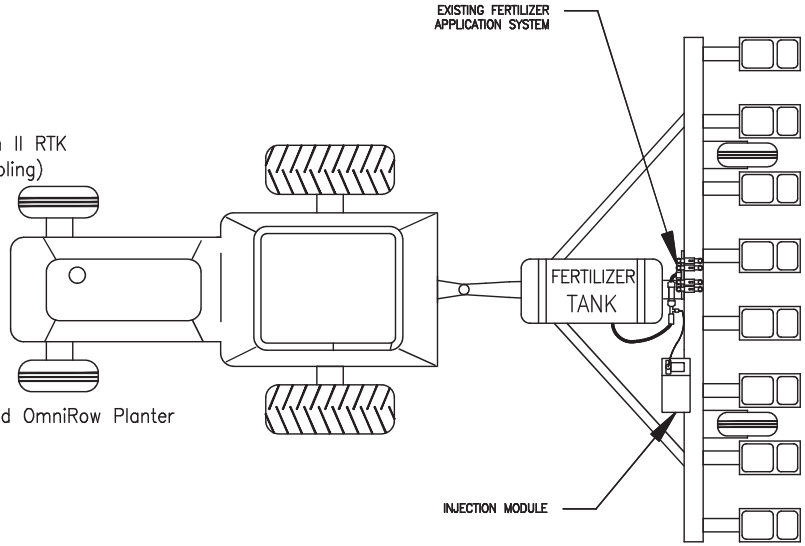

A
Select One (1) Chassis Cable:

115–0171–915 Cable, Power/CAN, Chassis, Tractors with Front Mounted Batteries
Approved Tractor Models: CAT Challenger–MT 700, 800, 900; JD 6x20, 6x30, 7220, 7320, 7420, 7520, 7230, 7330, 7430, 7530 (Small Frame 7x20 and 7x30 Series JD)
115–0171–936 Cable, Power/CAN, Chassis, Generic 4WD Tractors
Approved Tractor Models: JD 4WD; Case IH 4WD; New Holland 4WD; Buhler 4WD
115–0171–937 Cable, Power/CAN, Chassis, Row Crop Tractors
Approved Tractor Models: Case IH Row Crop Tractors, CAT Challenger MT500, 600; JD 7x00, 7x10; New Holland Row Crop
115–0171–938 Cable, Power/CAN, Chassis, Large Frame JD and Buhler Row Crop Tractors
Approved Tractor Models: JD 8x00, 8x10, 8x20, 8x30, 7620, 7720, 7820, 7920, 7630, 7730, 7830, 7930; Buhler Row Crop Tractors
115–4001–085 Cable, Power/CAN, Chassis, Steering Only Systems

B
Select One (1) Field Computer/Console Cable:

115–0172–001 Envizio Pro (II)/Viper Pro Console Cable, Chassis Cable Interface, Gen II RTK
115–0172–003 SCS 4400 Console Cable, Liquid Product, Gen II (includes chassis cabling)

C
Optional:

115–0171–929 Cable, 10' Extension, Cab Cable to Chassis Cable
117–0171–298 Kit, Magnetic Mount, Proximity Remote Swtich

D
Select One (1) CAN/Power Tee Extension Cable for Each Node (excluding SmarTrax and OmniRow Planter nodes)

115–0171–928 Cable, CAN/Power Implement Tee, 12" Lg
115–0171–951 Cable, CAN/Power Implement Extension Tee, 6' Lg
115–0171–916 Cable, CAN/Power Implement Extension Tee, 12' Lg
115–0171–917 Cable, CAN/Power Implement Extension Tee, 24' Lg
115–0171–934 Cable, CAN/Power Implement Extension Tee, 36' Lg

E
Select One (1) CAN TERMINATOR per implement (already included in OmniRow Planter, Product Controller, & AccuFlow System kits)

063–0173–224 Terminator, CAN Passive, 16 Pin AMP

F
Select One (1) Speed Sensor Extension Cable (if applicable)

115–0171–262 10'
115–0159–032 12'
115–0171–239 18'
115–0159–018 24'
115–0171–241 29'
115–0171–225 34'

FIGURE 4. Cable Connections for Envizio Pro/Viper Pro Systems (D/N 016-0171-531)

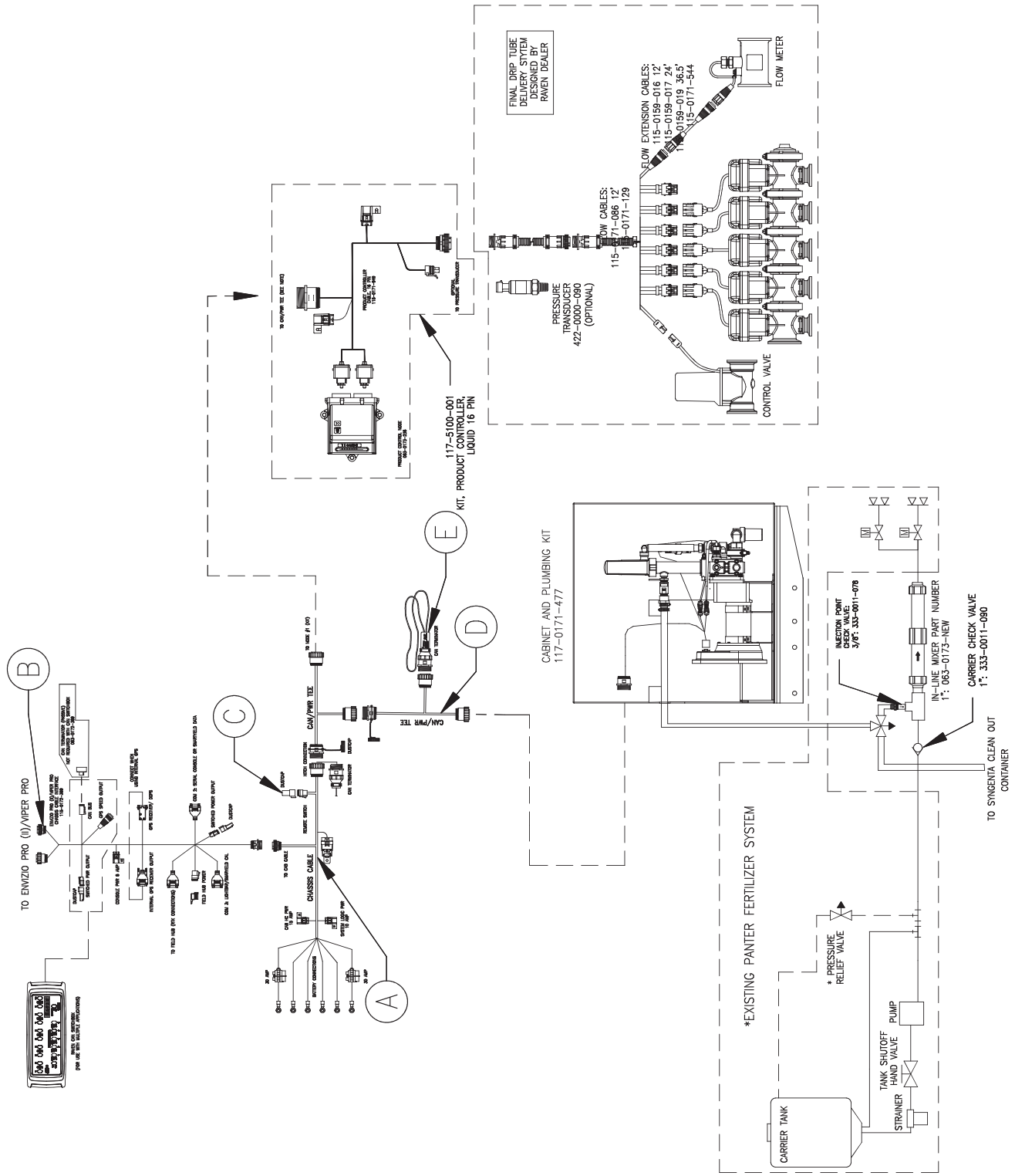

JOHN DEERE GREENSTAR RATE CONTROLLER SYSTEMS

FIGURE 5. Ordering Instructions for John Deere GreenStar Rate Control Systems (D/N 054-6100-009)

A DETERMINE IF EXTENSION CABLE IS NEEDED
6': 115–0172–093
12': 115–0172–094
24': 115–0172–095

B ORDER CABLE 115–0171–953 IF THE ADDED ELECTRICAL LOAD IS MORE THAN 30 AMPS, SELECT CABLES REQUIRED TO ADD A SECOND INJECTION PUMP

C SEE CAB NOTES

D A KIT, CABINET SYNGENTA ISO INJECTION IS REQUIRED – 117–0171–499

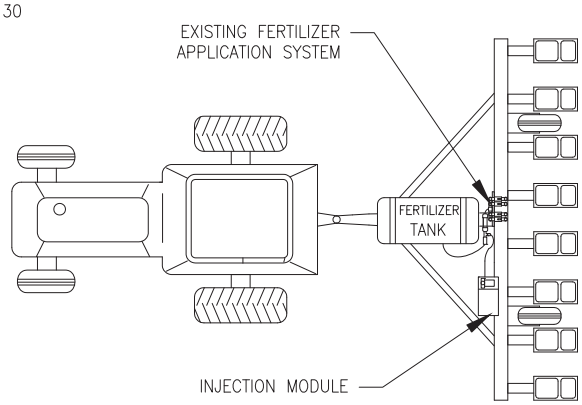

FIGURE 6. Cabling Connections for John Deere GreenStar Rate Control Systems (D/N 054-6100-009)

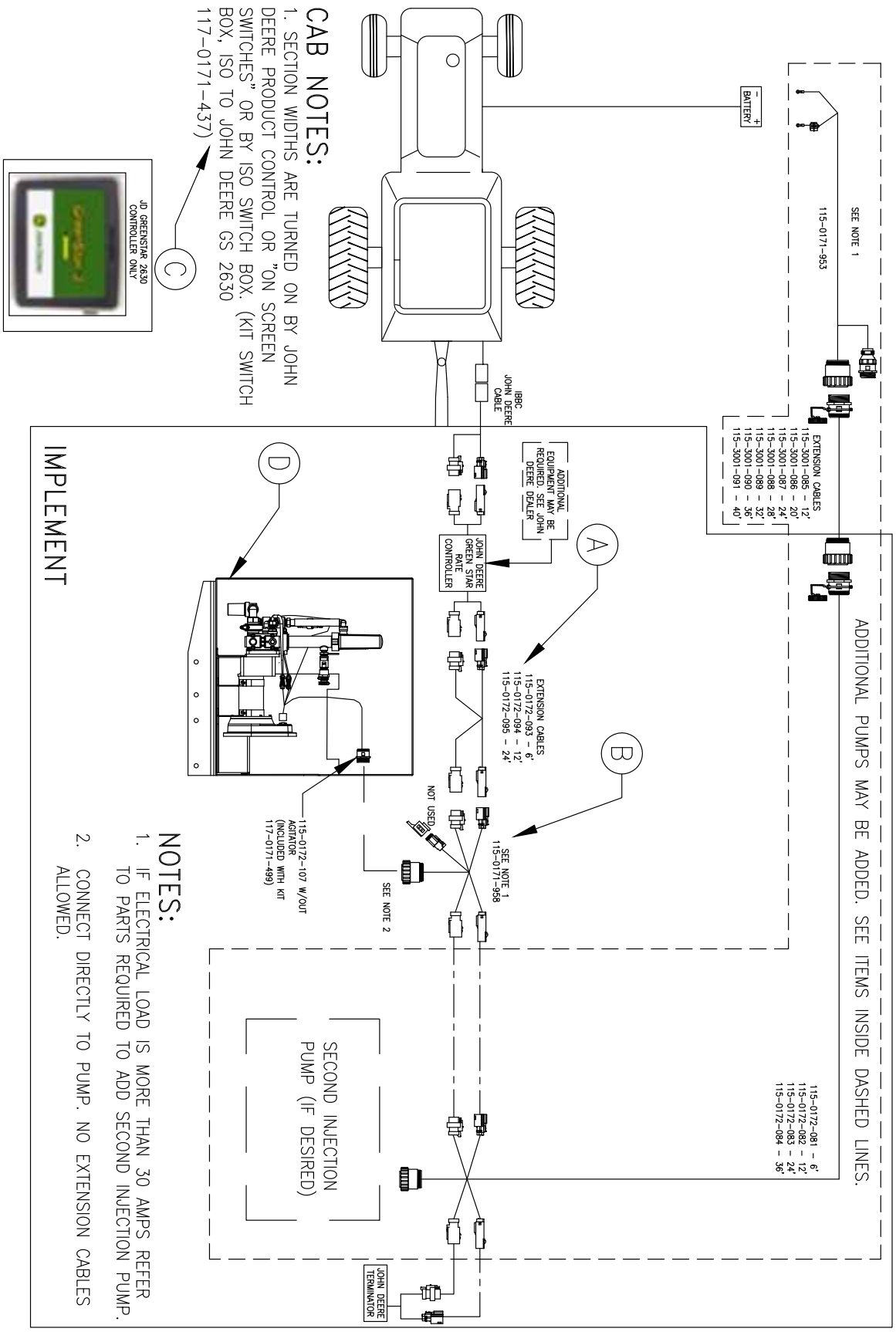

FIGURE 7. Ordering Instructions for ISOBUS Systems (D/N 054-6100-009)

A CABLE ISOBUS HITCH TO RAVEN ISO ECU IS REQUIRED
12': 115–0171–974
14': 115–0171–988
17': 115–0172–034
22': 115–0171–989
36': 115–0171–975
45': 115–0171–990

B A RAVEN ISO PRODUCT CONTROL NODE IS REQUIRED – 063–0173–006, THIS NODE IS REQUIRED EVEN IF CARRIER CONTROL IS DONE BY OTHER MEANS BECAUSE THIS NODE PROVIDES SECTION WIDTH INPUT.

C SEE NOTES

D OPTIONAL:
FOOT SWITCH ISO NODE 063–0173–080
FOOT SWITCH CABLE EXT 22' LONG 115–0171–865

E A PRODUCT CONTROLLER CABLE IS REQUIRED – 115–0171–945
OPTION EXTENSION CABLE: 12': 115–0171–319
24': 115–0171–320

F SELECT A FLOW CONTROL CABLE (IF CARRIER CONTROL IS DESIRED)
12': 115–0171–313 10 BOOM
24': 115–0171–314 10 BOOM
12': 115–0171–315 5 BOOM
24': 115–0171–316 5 BOOM

G SELECT A FLOW METER, CONTROL VALVE, AND SECTION VALVES AS DESIRED

H CABLE ISO IMPLEMENT EXTENSION TEE IS REQUIRED
12": 115–0171–960
6': 115–0171–961
12': 115–0171–931
17': 115–0172–035
24': 115–0171–932
36': 115–0171–933

J A RAVEN ISO TO ACTIVATE TERMINATOR ADAPTOR CABLE IS REQUIRED – 115–0171–963

K A TERMINATOR, ACTIVE POWELL IS REQUIRED – 063–0172–964

L A KIT, CABINET SYNGENTA ISO INJECTION IS REQUIRED 117–0171–499

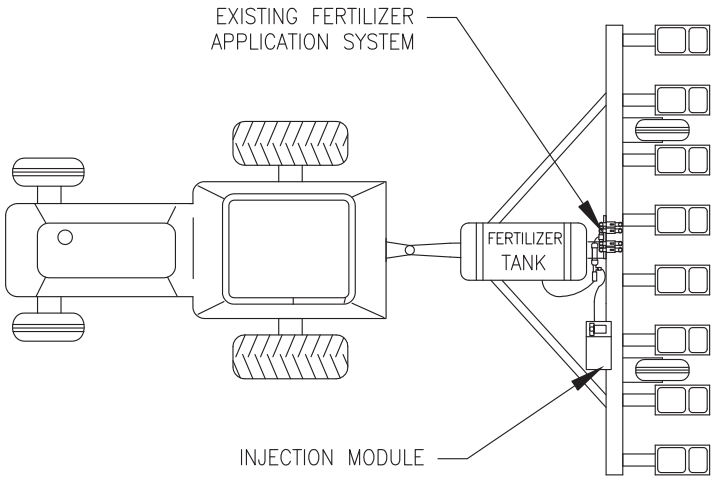

FIGURE 8. Cabling Connections for John Deere Rate Controller 2000 with Raven Sidekick PRO ICD (D/N 054-7120-001)

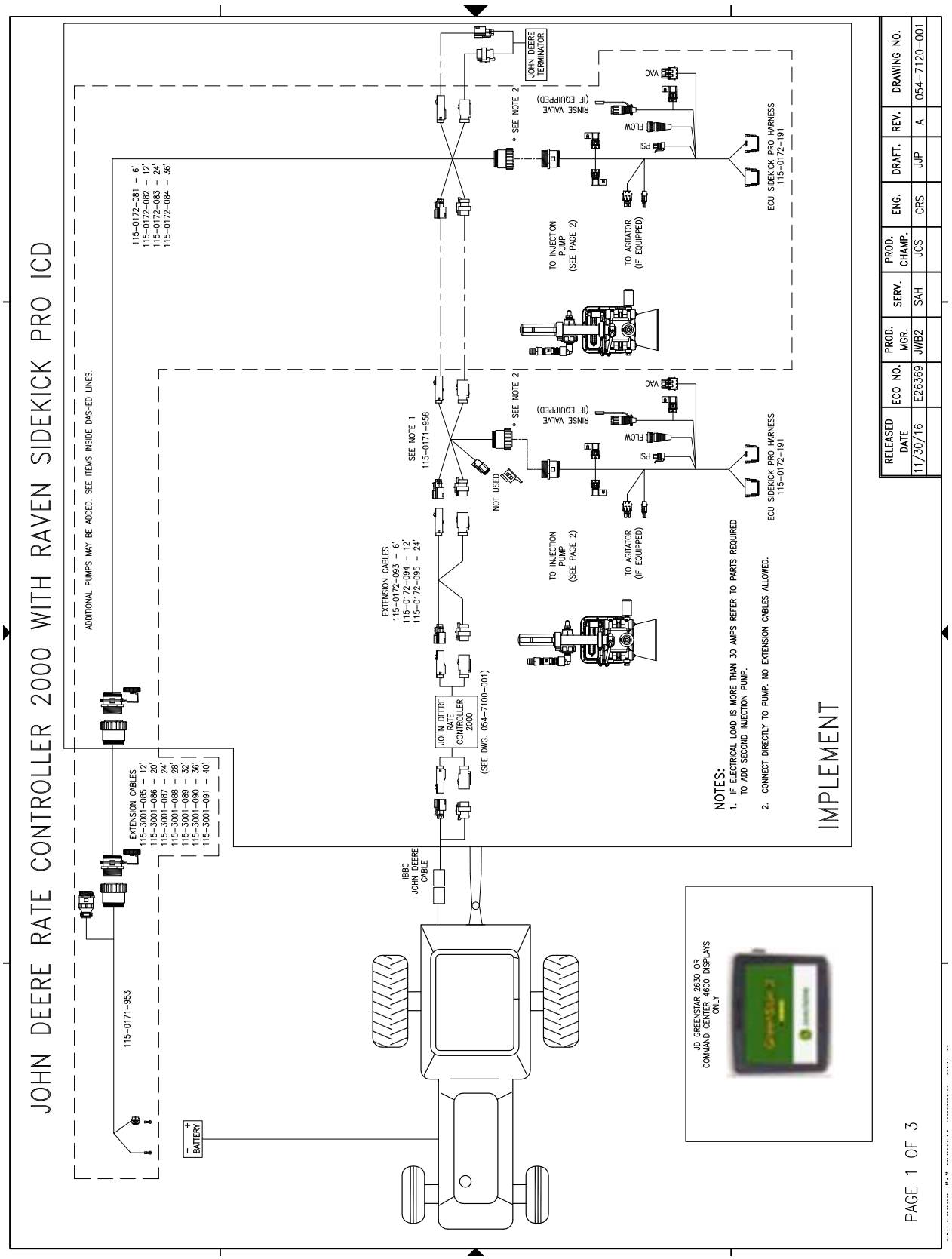

FIGURE 9. Cabling Connections for ISOBUS Systems (D/N 054-6100-009)

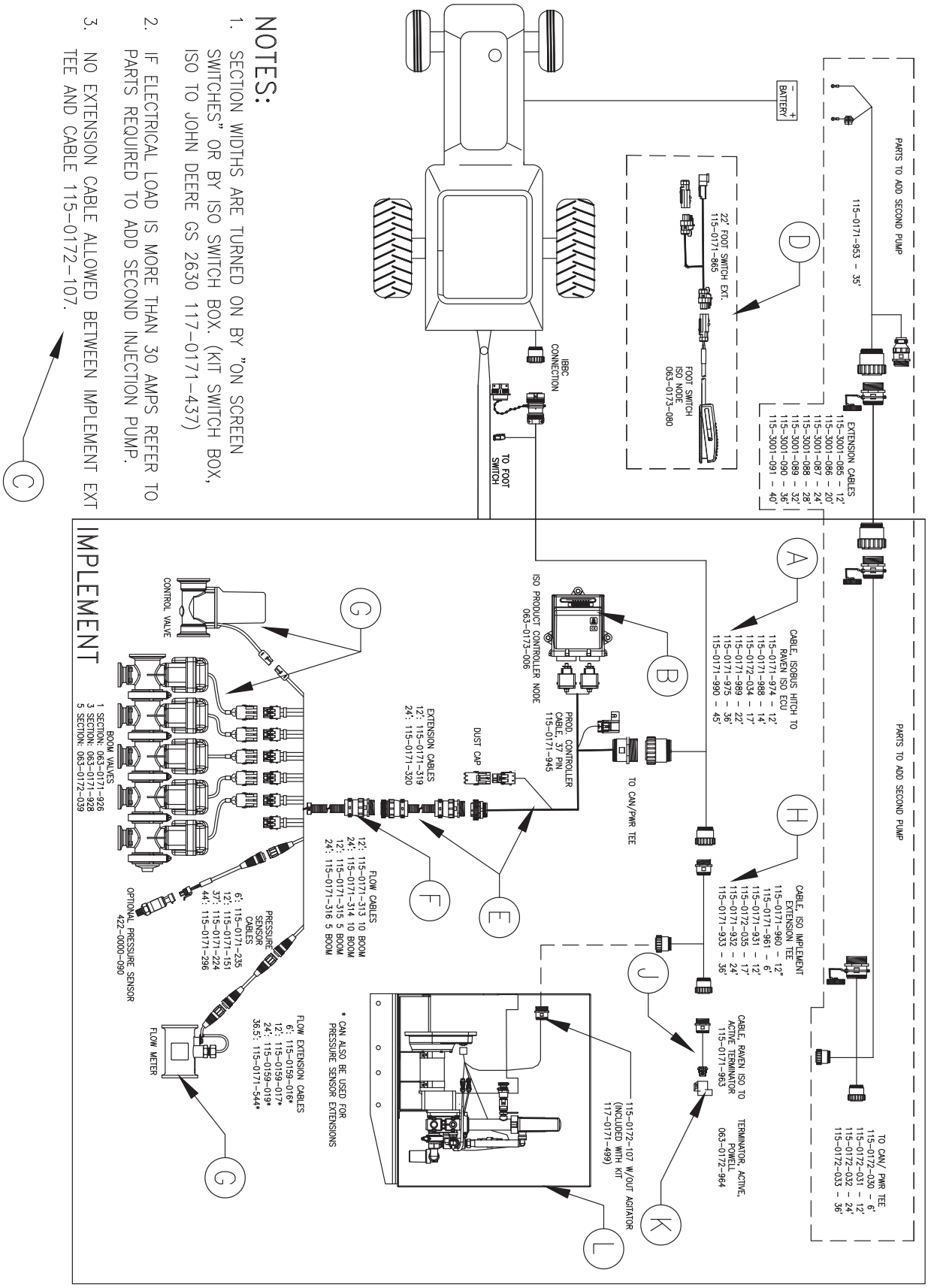

LIMITED WARRANTY

WHAT DOES THIS WARRANTY COVER?

This warranty covers all defects in workmanship or materials in your Raven Applied Technology Division product under normal use, maintenance, and service when used for intended purpose.

HOW LONG IS THE COVERAGE PERIOD?

Raven Applied Technology products are covered by this warranty for 12 months from the date of retail sale. In no case will the Limited Warranty period exceed 24 months from the date the product was issued by Raven Industries Applied Technology Division. This warranty coverage applies only to the original owner and is non-transferable.

HOW CAN I GET SERVICE?

Bring the defective part and proof of purchase to your Raven dealer. If the dealer approves the warranty claim, the dealer will process the claim and send it to Raven Industries for final approval. The freight cost to Raven Industries will be the customer's responsibility. The Return Materials Authorization (RMA) number must appear on the box and all documentation (including proof of purchase) must be included inside the box to be sent to Raven Industries.

WHAT WILL RAVEN INDUSTRIES DO?

Upon confirmation of the warranty claim, Raven Industries will (at our discretion) repair or replace the defective product and pay for the standard return freight, regardless of the inbound shipping method. Expedited freight is available at the customer's expense.

WHAT IS NOT COVERED BY THIS WARRANTY?

Raven Industries will not assume any expense or liability for repairs made outside our facilities without written consent. Raven Industries is not responsible for damage to any associated equipment or products and will not be liable for loss of profit, labor, or other damages. The obligation of this warranty is in lieu of all other warranties, expressed or implied, and no person or organization is authorized to assume any liability for Raven Industries.

Damages caused by normal wear and tear, misuse, abuse, neglect, accident, or improper installation and maintenance are not covered by this warranty.

We Solve Great Challenges.

EXTENDED WARRANTY

WHAT DOES THIS WARRANTY COVER?

This warranty covers all defects in workmanship or materials in your Raven Applied Technology Division product under normal use, maintenance, and service when used for intended purpose.

DO I NEED TO REGISTER MY PRODUCT TO QUALIFY FOR THE EXTENDED WARRANTY?

Yes. Products/systems must be registered within 30 days of retail sale to receive coverage under the Extended Warranty. If the component does not have a serial tag, the kit it came in must be registered instead.

WHERE CAN I REGISTER MY PRODUCT FOR THE EXTENDED WARRANTY?

To register, go online to www.ravenhelp.com and select Product Registration.

HOW LONG IS THE EXTENDED WARRANTY COVERAGE PERIOD?

Raven Applied Technology products that have been registered online are covered for an additional 12 months beyond the Limited Warranty for a total coverage period of 24 months from the date of retail sale. In no case will the Extended Warranty period exceed 36 months from the date the product was issued by Raven Industries Applied Technology division. This Extended Warranty coverage applies only to the original owner and is non-transferable.

HOW CAN I GET SERVICE?

Bring the defective part and proof of purchase to your Raven dealer. If the dealer approves the warranty claim, the dealer will process the claim and send it to Raven Industries for final approval. The freight cost to Raven Industries will be the customer's responsibility. The Return Materials Authorization (RMA) number must appear on the box and all documentation (including proof of purchase) must be included inside the box to be sent to Raven Industries. In addition, the words "Extended Warranty" must appear on the box and all documentation if the failure is between 12 and 24 months from the retail sale.

WHAT WILL RAVEN INDUSTRIES DO?

Upon confirmation of the product's registration for the Extended Warranty and the claim itself, Raven Industries will (at our discretion) repair or replace the defective product and pay for the standard return freight, regardless of the inbound shipping method. Expedited freight is available at the customer's expense.

WHAT IS NOT COVERED BY THE EXTENDED WARRANTY?

Raven Industries will not assume any expense or liability for repairs made outside our facilities without written consent. Raven Industries is not responsible for damage to any associated equipment or products and will not be liable for loss of profit, labor, or other damages. Cables, hoses, software enhancements, and remanufactured items are not covered by this Extended Warranty. The obligation of this warranty is in lieu of all other warranties, expressed or implied, and no person or organization is authorized to assume any liability for Raven Industries.

Damages caused by normal wear and tear, misuse, abuse, neglect, accident, or improper installation and maintenance are not covered by this warranty.